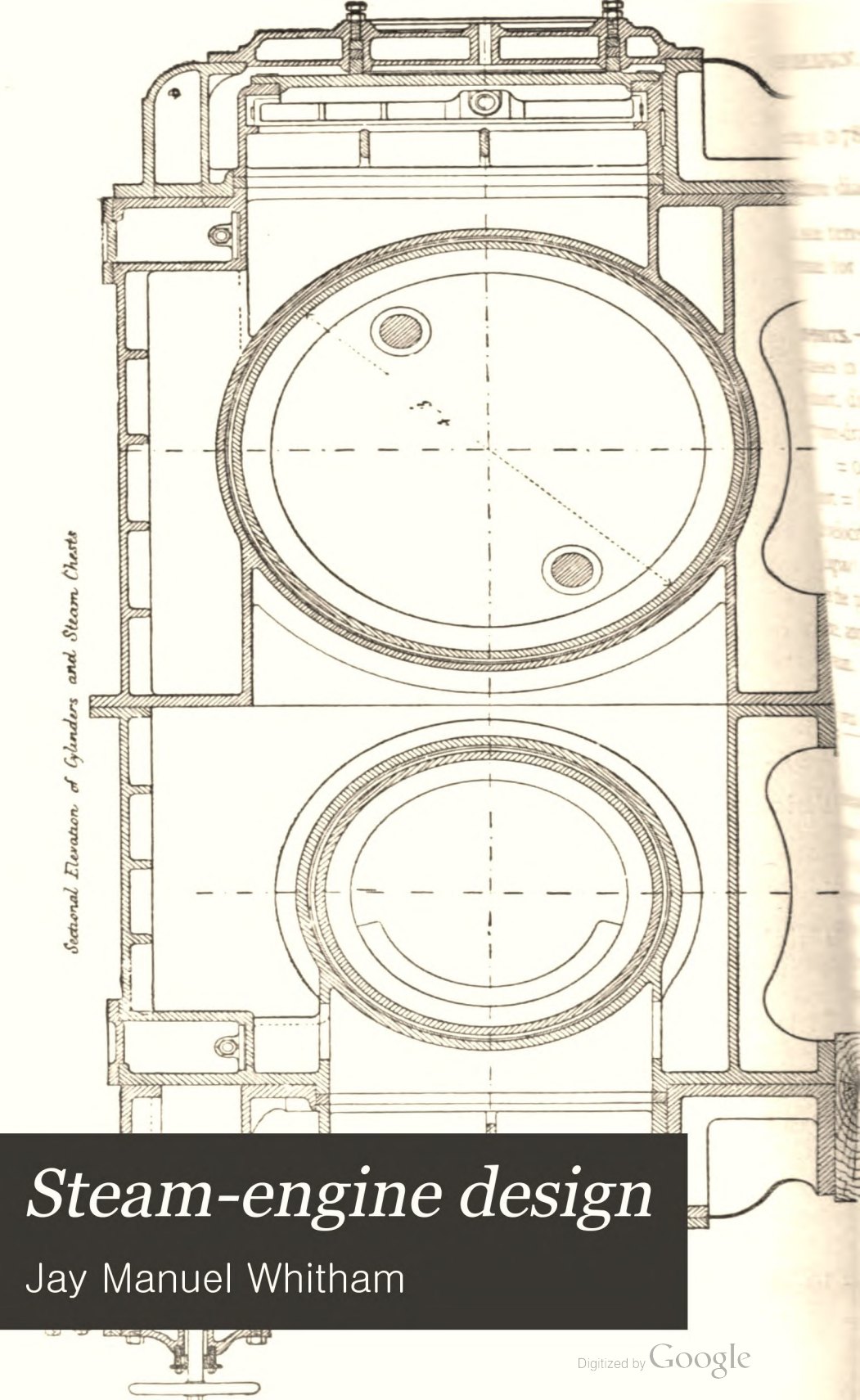

Steam-engine design

Jay Manuel Whitham

Digitized by Google

31/2
8

LIBRARY

OF THE

Lawrence Scientific School,

Engineering Dept.

Rec'd

22 Sept., 1892.

TRANSFERRED

TO

HARVARD COLLEGE

LIBRARY

STEAM-ENGINE DESIGN.

FOR THE USE OF

MECHANICAL ENGINEERS, STUDENTS, AND DRAUGHTSMEN.

BY

JAY M. WHITHAM, M.E., C.E.,

AUTHOR OF "CONSTRUCTIVE STEAM-ENGINEERING."

"Practice varies; but principles are eternal."

THIRD EDITION, REVISED.

210 ILLUSTRATIONS.

NEW YORK:

JOHN WILEY & SONS,

53 EAST TENTH STREET.

1891.

Digitized by Google

KF 17454

Eng 2698.91.7

HARVARD
UNIVERSITY
LIBRARY

1892, Sept. 22.

Scientific School.

~~31.2~~
~~8~~

~~31.8.39~~

JUN 20 1917
TRANSFERRED TO
HARVARD COLLEGE LIBRARY

Copyright, 1889,
BY
JAY M. WHITHAM.

DRUMMOND & NEU,
Electrotypers,
1 to 7 Hague Street,
New York.

FERRIS BROS.,
Printers,
326 Pearl Street,
New York.

Digitized by Google

PREFACE TO FIRST EDITION.

THE following pages treat of the application of the principles of mechanics to the design of the parts of a steam-engine of any type, or for any duty. They also treat of auxiliary attachments and constructive details. These are illustrated by numerous drawings.

The various technical journals and the works of Rankine, Weisbach, Zeuner, Seaton, Marks, Donaldson, Van Buren, Rose, and others have been freely consulted, and due credit has been given. Chapters VII and VIII were written by P. A. Engineer Asa M. Mattice, U. S. Navy, and are here published, for the first time, by his kind permission. Special mention is due P. A. Engineer John C. Kafer, U. S. Navy, who delivered at the U. S. Naval Academy a course of lectures on the steam-engine to the author's class, as these lectures have formed, to some extent, the basis of this work.

J. M. W.

FAYETTEVILLE, ARK., June 10, 1889.

Digitized by Google

Digitized by Google

CONTENTS.

INTRODUCTION.

ART.		PAGE
1.	Types of Engines,	1
2.	Clearance,	1
3.	Piston Speed,	2
4.	Friction,	4
5.	Fuel Economy,	5
6.	Weight of Parts,	5
7.	Radiation of Heat,	5

CHAPTER I.

PISTON AREA, PISTON-HEAD, THICKNESS OF CYLINDER, BOLTS, ETC., FOR A NON-COMPOUND ENGINE.

8.	Diameter of Cylinder,	7
9.	Example on Same,	10
10.	Length of Cylinder, Cylinder Bore, Thickness of Piston, Flange and Follower,	11
11.	Design of Piston by Empirical Methods,	21
12.	Design of Piston by Analytical Methods,	22
13.	Example on Same,	24
14.	Cylinder Design,	25
15.	Example on Same,	29
17.	Design of Valve Ports,	31

CHAPTER II.

DESIGN OF SLIDE-VALVES.

18.	Kinds of Valves,	32
19.	Square Slide-valves,	32
20.	Expansion Slide-valves,	33
21.	Zeuner's Diagram for a Square Valve,	35
22.	Zeuner's Diagram Considering Lap and Lead, and Problems,	37
23.	The Allen Slide-valve,	46
24.	Gozénbach or Gridiron-valve,	49
25.	Problems on Same,	54

Digitized by Google

ART. PAGE
26. The Meyer Valve, ... 58
27. Problems on Same, ... 62
28. Adjustment of the Valves of the U. S. S. *Despatch*, ... 65

CHAPTER III.

VALVE AND REVERSING GEARS.

29. The Stephenson Link, ... 71
30. Problems on Same, ... 75
31. The Gooch Link, ... 78
32. The Allen Link, ... 79
33. The Fink Link, ... 79
34. Joy's Valve Gear, ... 81
35. Marshall's Valve Gear, ... 87

CHAPTER IV.

STEAM-CHEST, VALVE, STUFFING-BOX, VALVE-STEM, LINK, ECCENTRIC, ECCENTRIC STRAPS AND RODS, KEYS.

36. Steam-chest, ... 95
37. Design of the Proportions of the Valve, ... 98
38. Stuffing-box, ... 104
39. Valve-stem, ... 111
40. Bolts Used in Link Motions, ... 114
41. Link and Link-block, ... 116
42. Eccentric-rod, ... 118
43. Eccentric-straps, ... 121
44. Eccentric, ... 122
45. Keys for Shafts, ... 125

CHAPTER V.

COMPOUND AND TRIPLE-EXPANSION ENGINES.

46. Kinds of Compound Engines and Theory of Action of Steam in them, 128
47. Rae's Method of Designing Compound Cylinder Diameters, . . 140
48. No "Drop" Method of Designing Compound Cylinder Diameters, . 143
49. Rankine's Method of Designing Compound Cylinder Diameters, . 145
50. Seaton's Method of Designing Compound Cylinder Diameters, . . 146
51. Design of Diameters for Equal Work and Expansion in the Cylinders, 152
52. Graphical Method of Designing Compound Cylinder Diameters Considering "Drop," 153
53. Summary of Methods, ... 155
54. Cylinder Ratio of Compound Engines, ... 155
55. Triple-expansion Engine, Graphic Method, ... 156
56. Triple-expansion Engine, Analytic Method, ... 157

Digitized by Google

CHAPTER VI.

THEORETICAL INDICATOR-DIAGRAMS OF A COMPOUND ENGINE.

ART. PAGE
57. Notation, ... 161
58. Continuous-expansion Compound Engine, ... 162
59. Receiver Compound Engine, Cranks at 90°, ... 163
60. Example on § 58, ... 165
61. Example on § 59, ... 166

CHAPTER VII.

CRANK-EFFORT DIAGRAMS, ILLUSTRATING THE INFLUENCE OF THE RECIPROCATING AND ROTATIVE PARTS OF AN ENGINE.

62. Meaning of Crank Effort, ... 168
63. Crank Effort for Uniform Piston Pressure, Neglecting the Angularity of the Connecting-rod, ... 169
64. Crank Effort for a Varying Piston Pressure, Neglecting the Angularity of the Connecting-rod, ... 171
65. Crank Effort for a Varying Piston Pressure, Considering the Angularity of the Connecting-rod, ... 171
66. Influence of the Inertia of the Reciprocating Parts when the Angularity of the Connecting-rod is Neglected, ... 173
67. Influence of the Inertia of the Reciprocating Parts when the Angularity of the Connecting-rod is Considered, ... 176
68. Illustration of the Effects of the Reciprocating Parts, ... 183

CHAPTER VIII.

FRICTION IN RELATION TO THE EFFICIENCY OF THE TURNING POWER OF THE STEAM-ENGINE.

69. Friction of the Piston and Piston-rod Stuffing-box, ... 186
70. Friction of the Cross-head Guides. 187
71. Friction of the Wrist-pin, ... 188
72. Friction of the Crank-pin and Crank-shaft Journals, ... 189
73. Example Illustrating the Influence of Frictional Resistance upon the Turning Power of an Engine, ... 191
74. Reverse of the Example in § 73, ... 194
75. Weight of the Fly-wheel, ... 199

CHAPTER IX.

DESIGN OF THE PISTON-ROD, CROSS-HEAD, AND GUIDE.

76. Design of the Diameter of the Piston-rod, ... 204
77. Design of the Piston End of the Piston-rod, ... 207
78. Area of the Slides, ... 208
79. Design of the Guides, ... 209
80. Distance Between the Guides, ... 211
81. The Cross-head, ... 213

Digitized by Google

CHAPTER X.

DESIGN OF THE CONNECTING-ROD.

ART. PAGE
82. Diameter of the Connecting-rod, ... 217
83. Design of the Connecting-rod Ends, ... 219

CHAPTER XI.

DESIGN OF THE CRANK-PIN.

84. Friction of the Crank-pin, ... 228
85. Length of the Crank-pin to Avoid Heating, ... 231
86. Diameter of an Overhung Crank-pin, ... 233
87. Design of the After Crank-pin Diameter for a Two-cylinder Engine, 234
88. Design of the After Crank-pin Diameter for a Three-cylinder Engine, 237

CHAPTER XII.

DESIGN OF THE CRANK-ARMS, CRANK, LINE AND PROPELLER SHAFTS, BEARINGS AND COUPLINGS.

89. Design of the Crank-arm Eyes, ... 239
90. Design of the Crank-arm, ... 241
91. Design of the Crank-shaft for a Single Engine, ... 244
92. Design of the Crank-shaft for a Two-cylinder Engine, ... 248
93. Design of the Crank-shaft for a Three-cylinder Engine, Cranks 120°, 252
94. Design of the Crank-shaft for a Three-cylinder Engine with L. P. Cranks Opposite and H. P. Crank Midway, ... 253
95. Design of the Line-shaft, ... 254
96. Design of the Thrust or Propeller Shaft for a Marine Engine, . . 254
97. Design of Crank- and Line-shaft Bearings, ... 259
98. Design of a Thrust Bearing for a Propeller Engine, ... 263
99. Shaft-couplings, ... 266
100. Board of Trade's Rules for Shafting, ... 272
101. Practical Rules for Shafting, ... 273

CHAPTER XIII.

CONDENSERS AND PUMPS.

102. Surface Condensers, ... 276
103. Thermal Experiments and Deduction of a Formula for the Condensing Surface, ... 278
104. Quantity of Condensing Water, ... 285
105. Design of Parts of a Surface Condenser, ... 285
106. Design of a Jet Condenser, ... 294
107. Design of the Injection Orifice, ... 298
108. Design of the Air-pump, ... 301
109. Design of the Circulating Pump, ... 308
110. Design of the Feed-pump, ... 314

Digitized by Google

ART. PAGE
111. Flow of Water Through Pipes, ... 317
112. Design of a Pump to Deliver Against a Head of Water, . . . 321

CHAPTER XIV.

ENGINE FRAME, PILLOW-BLOCKS, REVERSING ENGINE, PIPES, STOP-VALVES, COCKS, EXPANSION JOINTS, SCREW-THREADS, AND WALKING-BEAMS.

113. Foundations, ... 324
114. Engine Frames, ... 327
115. Pillow-blocks, ... 329
116. Distance between Shaft-bearings, ... 331
117. Power Required for Reversing and Pumping Engines, . . . 333
118. Size and Strength of Pipes, ... 335
119. Distance Between Hangers for a Pipe, ... 337
120. Design of Stop-valves, ... 338
121. Design of Cocks, ... 340
122. Design of Expansion joints, ... 343
123. Standard Screw-threads, ... 344
124. Walking-beams, ... 349

CHAPTER XV.

PROPELLING INSTRUMENTS AND THE POWERING OF VESSELS.

125. Theory of the Propeller, ... 353
126. The Indicated Horse-power for Vessels, ... 355
127. Radial Paddle-wheel, ... 358
128. Design of a Feathering Paddle-wheel, ... 360
129. Design of Parts of a Paddle-wheel, ... 365
130. The Screw-propeller. 368
131. The Diameter and Pitch of the Screw, ... 371
132. Area of Screw-blades and their Dimensions, ... 372
133. Kinds of Screw-propellers, ... 375

APPENDIX.

134. Strength of Materials, ... 381
135. Saturated-steam Table, ... 385
136. Supplement to § 65, ... 387

Digitized by Google

Digitized by Google

STEAM-ENGINE DESIGN.

INTRODUCTION.

1. Types.—The efficiency of a steam-engine for any particular duty depends largely upon the type selected. In choosing any particular type, we must endeavor to secure one which has the greatest number of advantages and the least number of disadvantages. Since the designer is familiar with the various types of engines in use, only the conditions governing him in making his selection will be enumerated.

These conditions are, briefly:

1. Clearance.
2. Piston speed.
3. Friction.
4. Economy of fuel.
5. Weight and complexity of moving parts.
6. Accessibility for repairs.
7. Radiating surface.

2. Clearance is the volume included between the piston, when at the end of its stroke, and the valve-seat. The distance between the piston, when at the end of its stroke, and the cylinder-head is sometimes (inaccurately) called clearance. This latter is *piston* and not *engine* clearance.

Clearance is measured as a certain percentage of the stroke displacement of the piston. As the clearance volume is nearly constant for any fixed diameter, the percentage is greater for short- than for long-stroke engines. Hence it is well to have the stroke as long as possible, in order to eliminate the prejudicial effect of clearance. If the stroke is fixed, the clearance volume will be nearly directly proportional to the square of the diameter of the cylinder.

Digitized by Google

Clearance volume is useful for compression, as illustrated in § 8. The clearance volume necessary for compression is, for the same power, greatest with steam of low initial pressure. Hence it is less with compound than with simple engines of the same power.

In many stationary engines, particularly in the Corliss type, the small volume of clearance is one of their greatest economic features. The successful designer will make this volume a minimum. This occurs when the piston faces and inner surface of cylinder-heads are accurately turned, and when there is no wear in the brasses. In practice, the castings are left as they come from the foundry, and the bearings do wear. Marine practice requires an allowance double that necessary for stationary engines. Ordinary slide-valve, stationary engines require an allowance as below:

Indicated Horse-power.	Clearance of Piston made for roughness of castings at each end of cylinder. Inches.	Clearance of Piston made for each bearing or working joint between the piston and the shaft. Inches.
Up to 200	$\frac{1}{8}$	$\frac{1}{16}$
200 to 500	$\frac{3}{16}$	$\frac{3}{32}$
500 to 3000	$\frac{1}{4}$	$\frac{3}{32}$

This clearance of piston is seldom over one-half inch in *best* marine practice for the most powerful engines. The distance is generally made greatest for the inner end of the cylinder, with direct-acting engines.

3. Piston Speed.—The formula for indicated horse-power is

$$\text{I. H. P.} = \frac{\text{plan}}{33000},$$

where p = mean unbalanced pressure in pounds on a square inch of the piston;

l = stroke of piston in feet;

Digitized by Google

a = area of piston in sq. in.;

n = number of strokes made by the piston in one minute.

From the formula, it is evident that if the area of piston and the pressure are constant, the

I. H. P. $\propto ln \propto$ piston speed in feet per minute;

and, eliminating the effect due to radiation of heat, we decrease the percentage of clearance and increase the power of the engine by having a long stroke.

The piston speed in feet per minute varies from 100 to 1000. The writer * gave in *Proceedings of U. S. Naval Institute*, No. 30, a table of engine performances in which it was found that the

				Feet per Minute.
Average piston speed of	26	marine simple	horizontal engines is	497
" " " "	3	" "	vertical " "	789
" " " "	24	" compound	horizontal " "	544
" " " "	53	" "	vertical " "	569
" " " "	28	recently constructed compound	" "	770
" " " "	14	" " triple-expansion	" "	807

A piston speed of 1200 feet per minute has been realized in locomotive practice, and 1100 with the triple-expansion engines of the *Destructor*. Although the piston speed varies between such wide limits, the number of revolutions of the shaft is quite uniform. In a machine-shop, an electric-light plant, or in locomotive or marine practice, there are usually considerations requiring a fixed velocity of rotation, while the length of stroke will not be thought of save for economic reasons.

It is shown in mechanics "that what you gain in velocity you lose in pressure or resistance, the power being constant." Hence, if the load on the engine be increased, the velocity is decreased till the engine stops; while if the load were reduced to *nil*, the speed of the piston would be equal to that of the live steam flowing into the cylinder, or, approximately, 6000 feet per minute. Theoretically, if one-half of the load were

* The last two results have been deduced from tables given by Asst. Engineer R. S. Griffin, U. S. N., in No. 4, *General Information Series*, OFFICE OF NAVAL INTELLIGENCE, June 1887.

Digitized by Google

applied, the piston speed would be $\left(6000 \times \frac{1}{\sqrt{2}} = \right)4255$ feet per minute.

It seems absurd to imagine that a velocity approaching this will ever be realized in a steam-engine, yet we are running now at piston speeds which were thought to be impossible only twenty years ago.

The tendency is towards an increase in piston speed, and a consequent decrease in weight and first cost of the machinery.

4. The Friction of Engine, Pumps, and all Moving Parts demands more attention than is ever bestowed upon it. The engine having the least number of moving parts is, other things being equal, to be selected. The number of moving parts depends on the type of engine, its position, and the number of auxiliary attachments. The friction of the engine at any velocity is very nearly a fixed quantity, and is found by taking an indicator-diagram from the unloaded engine. It is generally stated as two pounds per unit of piston area. Prof. R. H. Thurston found* that the coefficient of friction of cool journals, well lubricated, running at velocities ranging from 100 to 1200 feet per minute, and with pressures varying from 4 to 200 pounds per square inch of projected area, varies with the material used for the journal and boxes directly with the fifth root of the velocity, and inversely as the square root of the pressure, or

$$\text{coef. of friction} = \frac{a\sqrt[5]{v}}{\sqrt{p}};$$

where a is a constant ranging from 0.02 to 0.03 for steel journals and bronze boxes. The resistance of the guide or slide

$$= 0.01 \text{ to } 0.015 \times \frac{\text{load on piston}}{1.50}.$$

The coefficient of friction for a journal is, without doubt, much less than that for the piston or valve. Prof. Thurston, as the

* *Friction and Lubrication*, by Thurston.

Digitized by Google

result of an exhaustive series of experiments with a non-condensing engine, deduces the following results for the internal friction (*Trans. Am. Soc. M.E.*, vol. ix): (1) When the speed is constant, by the use of a throttling governor, the total internal friction is constant for all loads, and that variations existing in the friction of bearings, etc., due to variations in power transmitted, "form too small a proportion of the total friction to have important or sensible effect on the total load;" (2) that internal friction of this class of engines is "sensibly independent of the magnitude of the load and of the power developed," but "variable with speed and with efficiency of lubrication." Hence, as we have no definite laws guiding us in determining the exact value of the frictional resistance of an engine, we must, if possible, be guided by the frictional indicator-diagram of an engine of our selected type and duty. The method followed in making allowance for this resistance is discussed in Chapter VIII.

5. **Economy of Fuel** can be attained by reducing the evil effects of radiation, clearance, and low piston speed to a minimum: by using superheated steam of high pressure in a lagged, and jacketed, and balanced compound or triple-expansion engine; by reducing the friction of the moving parts, their number and weight, to a minimum.

6. **The Weight of the Moving Parts** should be so fixed that the necessary strength will be gained without any useless expenditure of metal. Chief Engineer Richard Sennett, R.N., gave, in *Jour. Royal United Service Insti.*, p. 830, No. 118, vol. xxvi, a most valuable table of the performances of thirty-five of H.B.M. men-of-war. In it the weight of the engine proper is shown to vary from 20.7 to 153 pounds per indicated horse-power developed.

In non-condensing, automatic, stationary engines the range is from 100 to 180 pounds.

The successful designer will always study to reduce the number of parts, and to have every part accessible for repairs.

7. **Radiation.**—The surface for radiation must be a mini-

Digitized by Google

mum. This is realized when the diameter and length of the cylinder are equal.*

The steam-pipe, valve-chests, and cylinder should be well lagged with a non-conducting substance, such as mineral wool, felt, or asbestos.

Chas. E. Emery, Ph.D., gave to the *Am. Soc. of M. E.*, in 1881, the following results of his experiments with non-conducting materials. They are arranged in order of efficiency.

Felt, ...	100.00
Mineral wool No. 2, 2 in. thick, . . .	83.02
Sawdust, 2 in. thick, ...	68.00
Mineral wool No. 1, 2 in. thick, . . .	67.60
Charcoal, 2 in. thick, ...	63.20
Cross-cut pine, 2 in. thick, ...	55.30
Loam, 2 in. thick, ...	55.00
Asbestos, 2 in. thick, ...	36.30
Air-space, 2 inches, ...	13.60

---

* Prove that a cylinder's surface is least for a given volume when its length and diameter are equal. Let L = length, D = diameter, V = volume (constant), s = surface. Then

$$V = \frac{\pi D^2}{4} \times L,$$

$$S = \pi DL + 2\frac{\pi D^2}{4} = \pi D \times \frac{4V}{\pi D^2} + \frac{\pi D^2}{2} = \frac{4V}{D} + \frac{\pi D^2}{2}.$$

$$\frac{ds}{dD} = 0 = -\frac{4V}{D^2} + \pi D, \qquad \text{therefore} \quad D = \sqrt[3]{\frac{4V}{\pi}}.$$

But $$L = \frac{4V}{\pi D^2} = \sqrt[3]{\frac{4V}{\pi}}, \qquad \text{whence} \quad D = L.$$

Digitized by Google

CHAPTER I.

DESIGN OF PISTON AREA, PISTON, THICKNESS OF CYLINDER, BOLTS, ETC., FOR A NON-COMPOUND ENGINE.

8. Diameter of Cylinder.—Having determined upon the power of the engine, its type, speed of piston, initial and terminal pressures of steam in the cylinder, we are prepared to begin the design of the parts for the duty required of them.

From § 3 we have

$$a = \frac{33000 \times \text{I. H. P.}}{p_e l n},$$

in which a = area of the piston in square inches;

I. H. P. = indicated horse-power of the engine;

p_e = mean effective or unbalanced pressure on each square inch of the piston in pounds;

l = length of stroke in feet;

n = number of strokes per minute;

Let p_1 = initial absolute pressure of steam in pounds per square inch at the cylinder;

p_B = initial absolute pressure of steam at the boiler;

p_2 = terminal absolute pressure of steam, or driving pressure at the end of the stroke;

p_3 = mean absolute back pressure against the piston per square inch;

p'_m = mean absolute driving pressure throughout the stroke in pounds per square inch.

If the pipe conveying the steam from the boiler to the steam-chest is short, direct, and lagged, the fall will not exceed $\frac{1}{13}$ of p_B, or

$$p_1 = \tfrac{12}{13} p_B.$$

Since the steam filling the clearance volume expands with that in the cylinder proper, we will divide the volume of clearance by the area of the piston, and find the length of cylinder

Digitized by Google

equivalent to the clearance proper. *This length we will hereafter mention as clearance.*

To illustrate in an ideal card: BC = length of stroke, and AB = length of cylinder equivalent to clearance. This length, AB, or the percentage of clearance, $\frac{AB}{BC}$, must now be assumed by the designer, who will be governed by the conditions named in § 2. The percentage will be from 5 to 10 with short-stroke, and from 2 to 5 with long-stroke engines.

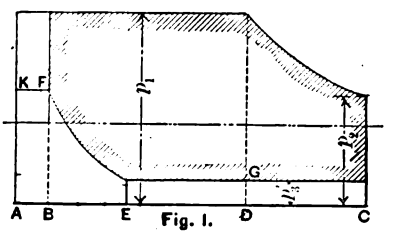

Fig. 1.

Let steam be cut off at D, then the absolute ratio of expansion is $\frac{AC}{AD} = n$ (see § 289, Rankine's *Steam-Engine*), and the mean absolute pressure between A and C is

$$p_m = p_1 \left(\frac{\log_e n + 1}{n} \right).$$

The following will be of frequent use, viz.:

TABLE OF HYPERBOLIC LOGARITHMS ($\log_e$). [HASWELL.]

No.	Log.	No.	Log.	No.	Log.	No.	Log.	No.	Log.	No.	Log.	No.	Log.	No.	Log.
1.05	0.049	2.05	.718	3.05	1.115	4.05	1.399	5.05	1.619	6.05	1.8	7.05	1.953	8.05	2.086
1.1	.095	2.1	.742	3.1	1.131	4.1	1.411	5.1	1.629	6.1	1.808	7.1	1.96	8.1	2.092
1.15	.14	2.15	.765	3.15	1.147	4.15	1.423	5.15	1.639	6.15	1.816	7.15	1.967	8.15	2.098
1.2	.182	2.2	.788	3.2	1.163	4.2	1.435	5.2	1.649	6.2	1.824	7.2	1.974	8.2	2.104
1.25	.223	2.25	.811	3.25	1.179	4.25	1.447	5.25	1.658	6.25	1.833	7.25	1.981	8.25	2.11
1.3	.262	2.3	.833	3.3	1.194	4.3	1.459	5.3	1.668	6.3	1.841	7.3	1.988	8.3	2.116
1.35	.3	2.35	.854	3.35	1.209	4.35	1.47	5.35	1.677	6.35	1.848	7.35	1.995	8.35	2.122
1.4	.336	2.4	.875	3.4	1.224	4.4	1.482	5.4	1.686	6.4	1.856	7.4	2.001	8.4	2.128
1.45	.372	2.45	.896	3.45	1.238	4.45	1.493	5.45	1.696	6.45	1.864	7.45	2.008	8.45	2.134
1.5	.405	2.5	.916	3.5	1.253	4.5	1.504	5.5	1.705	6.5	1.872	7.5	2.015	8.5	2.14
1.55	.438	2.55	.936	3.55	1.267	4.55	1.515	5.55	1.714	6.55	1.879	7.55	2.022	8.55	2.146
1.6	.47	2.6	.956	3.6	1.281	4.6	1.526	5.6	1.723	6.6	1.887	7.6	2.028	8.6	2.152
1.65	.5	2.65	.975	3.65	1.295	4.65	1.537	5.65	1.732	6.65	1.895	7.65	2.035	8.65	2.158
1.7	.531	2.7	.993	3.7	1.308	4.7	1.548	5.7	1.74	6.7	1.902	7.7	2.041	8.7	2.163
1.75	.56	2.75	1.012	3.75	1.322	4.75	1.558	5.75	1.749	6.75	1.91	7.75	2.048	8.75	2.169
1.8	.588	2.8	1.03	3.8	1.335	4.8	1.569	5.8	1.758	6.8	1.917	7.8	2.054	8.8	2.175
1.85	.612	2.85	1.047	3.85	1.348	4.85	1.579	5.85	1.766	6.85	1.924	7.85	2.061	8.85	2.18
1.9	.642	2.9	1.065	3.9	1.361	4.9	1.589	5.9	1.775	6.9	1.931	7.9	2.067	8.9	2.186
1.95	.668	2.95	1.082	3.95	1.374	4.95	1.599	5.95	1.783	6.95	1.939	7.95	2.073	8.95	2.192
2.	.693	3.	1.099	4.	1.386	5.	1.609	6.	1.792	7.	1.946	8.	2.079	9.	2.198

Digitized by Google

Since the piston travels from B to C, the mean absolute pressure throughout the stroke is

$$p'_m = \frac{p_m \times \overline{AC} - p_1 \times \overline{AB}}{\overline{BC}};$$

on the assumption that Mariotte's law is true for the steam used.

If a steam-jacket or superheated steam be used, p'_m would be increased in the ratio of 17th power of 16th root—an increase so slight that it may be neglected in designing.

The mean absolute pressure is opposed by a mean back pressure, which gives for a resultant the mean pressure effective for work, p_e.

The back pressure in the cylinder is due to the resistance the exhaust steam meets in the exhaust ports and pipes, and to air and uncondensed steam or vapor. This pressure in the cylinder is always in excess of the reading of the vacuum gauge. For a non-condensing engine the back pressure ranges from 15 to 25 lbs. absolute, while 17 lbs. will be a fair value for the designer to assume. For a condensing engine the range is from 2 to 5 pounds.

The exhaust-valve is generally closed before the stroke is completed, which results in compressing the steam then in the cylinder, ahead of the piston, into the clearance space, thereby reducing the necessity for lead to the valve, cushioning, storing up energy in the clearance space, and preventing a sudden drop in the pressure of the live steam at the instant of admission. We will suppose the exhaust-valve to be closed at E. The volume $\overline{AE}$ is filled with steam at a pressure $\overline{DG} = p_3'$, which will be compressed to a volume $\overline{AB}$, and changed to a pressure $\overline{BF} = n'p_3'$, where n' = ratio of compression, or $\frac{\overline{AE}}{\overline{AB}}$.

The mean pressure for the small card $KFEBAK$ is

$$n'p_3'\left(\frac{1+\log_e n'}{n'}\right) = p_3'(1+\log_e n').$$

The area $\overline{AF} = n'p_3' \times$ clearance $= n'p_3' \times \frac{\overline{AE}}{n'} = p_3' \times \overline{EA}$.

Digitized by Google

Whence the mean back pressure between E and B is

$$p_3'' = \frac{\overline{AE} \times p_3'(1 + \log_e n') - \overline{AE} \times p_3'}{\overline{AE} - \overline{AB}}$$

$$= p_3' \times \frac{1 + \log_e n' - 1}{1 - \frac{1}{n'}} = n' p_3' \times \frac{\log_e n'}{n' - 1}.$$

The mean back pressure throughout the stroke is

$$p_3 = \frac{p_3' \times \overline{EC} + p_3'' \times \overline{EB}}{\overline{BC}}.$$

The mean effective or unbalanced pressure throughout the stroke is

$$p_e = p'_m - p_3 = \frac{p_m \times \overline{AC} - p_1 \times \overline{AB}}{BC} - \frac{p_3' \times \overline{EC} + p_3'' \times \overline{EB}}{BC}.$$

We can now solve the equation

$$a = \frac{33000 \times \text{I. H. P.}}{p_e l n},$$

which will give us the piston area necessary for a simple engine to develop the required power.

9. **Example.**—Given I. H. P. = 500, stroke 2 feet, revolutions 60 per minute, boiler-gauge pressure of steam 76 lbs., steam to be cut off at half stroke, condensing engine, vacuum 25 inches of mercury, clearance to be .6 per cent of the stroke displacement, exhaust-valve to close so as to compress up to 30 lbs. Required the diameter of the cylinder.

$$p_1 = \frac{12}{13}(76 + 15) = 84 \text{ lbs.}; \quad n = \frac{1 + 0.06}{0.56} = 1.89;$$

$$p_m = 84\left(\frac{\log_e 1.89 + 1}{1.89}\right) = \frac{84 \times 1.636}{1.89} = 72.33 \text{ lbs.};$$

$$p'_m = 72.33 \times 1.06 - 84 \times 0.06 = 71.61 \text{ lbs.};$$

Digitized by Google

$$n' = \frac{30}{2.5} = 12, \text{ since } \frac{30 - 25}{2} = 2.5 = p_3';$$

$$p_3'' = 12 \times 2.5 \times \frac{\log_e 12}{12 - 1} = 6.72;$$

$$\overline{AE} = 12 \times 0.05 = 0.72 \text{ of stroke};$$

$$\overline{EC} = 1.06 - 0.72 = 0.34 \quad \text{“}$$

$$\overline{EB} = 0.72 - 0.06 = 0.66 \quad \text{“}$$

$$p_3 = \frac{2.5 \times 0.34 + 6.72 \times 0.66}{1} = 5.29 \text{ lbs.};$$

$$p_t = p'_m - p_3 = 71.61 - 5.29 = 66.32 \text{ lbs.};$$

a = area of piston in square inches

$$= \frac{33000 \times 500}{66.32 \times 2 \times 60 \times 2} = 1036.6.$$

Diameter of cylinder = 36.3 inches.

10. Length of Cylinder, Cylinder Bore, Thickness of Piston, Flange, and Follower.—The length of the cylinder bore = stroke + breadth of piston-ring—$\frac{1}{8}$ to $\frac{1}{2}$ inch.

The length of cylinder between heads = stroke + thickness of piston + the sum of the piston clearance at both ends.

The thickness of the piston = breadth of piston-ring + thickness of flange on one side to carry the ring + thickness of the follower-plate.

The flange and follower-plate are always made strong enough to carry the packing-ring, and allow for facing in case the piston is refitted. The thickness may be taken from the following table, for a cast-iron piston :

Diameter. Inches.	Thickness of Flange or Follower. Inches.
8 to 10	$\frac{5}{8}$ to $\frac{1}{2}$
36	$\frac{3}{4}$
60 to 100	1

Digitized by Google

The body of the piston is called the *spider*. The follower-plate is sometimes made thicker at the joint with the spider in order to allow for the bolt holes and for safety in handling. The follower-plate may be made lighter if it is ribbed, but the cylinder-head must be of a corresponding shape, so that the clearance volume will not be increased.

The spider for a small piston is made of one thickness of metal, and the packing-rings are sprung into place.

Pistons up to 78 inches in diameter have been made of one thickness without stiffening ribs, by casting them in the form of a cone. Pistons above 12 inches in diameter in high-pressure engines, and 20 inches in low-pressure, are usually made cellular. In this case there are two thicknesses of metal and stiffening ribs between. The spider must be strong enough to resist the live load upon it due to the sudden admission of steam, and also to provide for the increased pressure due to priming. The piston must everywhere be thick enough to insure a good casting.

The various ways in which pistons are made may be seen from the following figures.

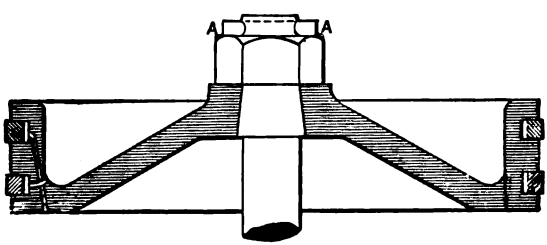

Fig. 2.

Fig. 2 is a solid casting, made to conform to the shape of the cylinder ends. Castings up to 78 inches in diameter have been made in this shape. It may be further strengthened by radial ribs. In order to get sufficient bearing surface, the circumference is flanged as shown.

Another form of piston* used where the diameter seldom

* See p. 67, *Pro. of Am. Ry. Master Mechanics' Assoc.*, June 1887.

Digitized by Google

exceeds 20 inches is shown in Fig. 3. The piston is cored out. The core-holes are filled by screw-stays, which also add strength and rigidity to the casting. The radial ribs give additional strength.

Large pistons are always made cellular. Fig. 4 illustrates* a piston for the condensing cylinder of the U. S. S. *Nipsic*. The piston is of composition, and strengthened by a system of rectangular cells.

Fig. 5 shows the form of piston used in the Tangye engine. Strength is secured by means of radial arms.

Fig. 6 is a cut of the piston of the Eclipse Corliss engine. The follower-plate is a disk rather than an annular ring. In Fig. 6*a* is shown the piston of the Watts-Campbell engine. It differs from Fig. 6 only in the method adopted for keeping the packing rings tight.

The *boss* or *hub* of the piston is always made thicker than any other part. The piston-rod must fit into the hub without the slightest lost motion. The various ways in which the rod is secured to the piston are shown in Figs. 2, 3, 4, 5, 6, 14, 15, 16, and 17. In Fig. 2 the nut is secured by the key marked *A*. The piston and rod should always be so secured that they may easily be separated if necessary. Hence the objection to the form shown in Fig. 3.

The follower-plate must be rigid enough in itself to be handled without breakage. For this reason it is sometimes flanged as shown in Fig. 4. The form shown in Figs. 5, 6, and 6*a* do not require a flange, since the followers are disks rather than annular rings. The methods sometimes used in securing the follower-plate bolts from backing out are shown in Figs. 10, 11, and 12. In Fig. 10 an annular ring of brass, having holes of the shape corresponding to the bolt-heads, fits over all the bolt-heads and locks them. In Fig. 12 each bolt is secured separately. Fig. 11 is the Nicholl lock nut. It consists of a plate *A* which is cut out to fit the bolt-head. The follower-plate is counterbored, as shown by *BCDE*, to a depth equal to

* *Engineering*, xxii. 439.

Digitized by Google

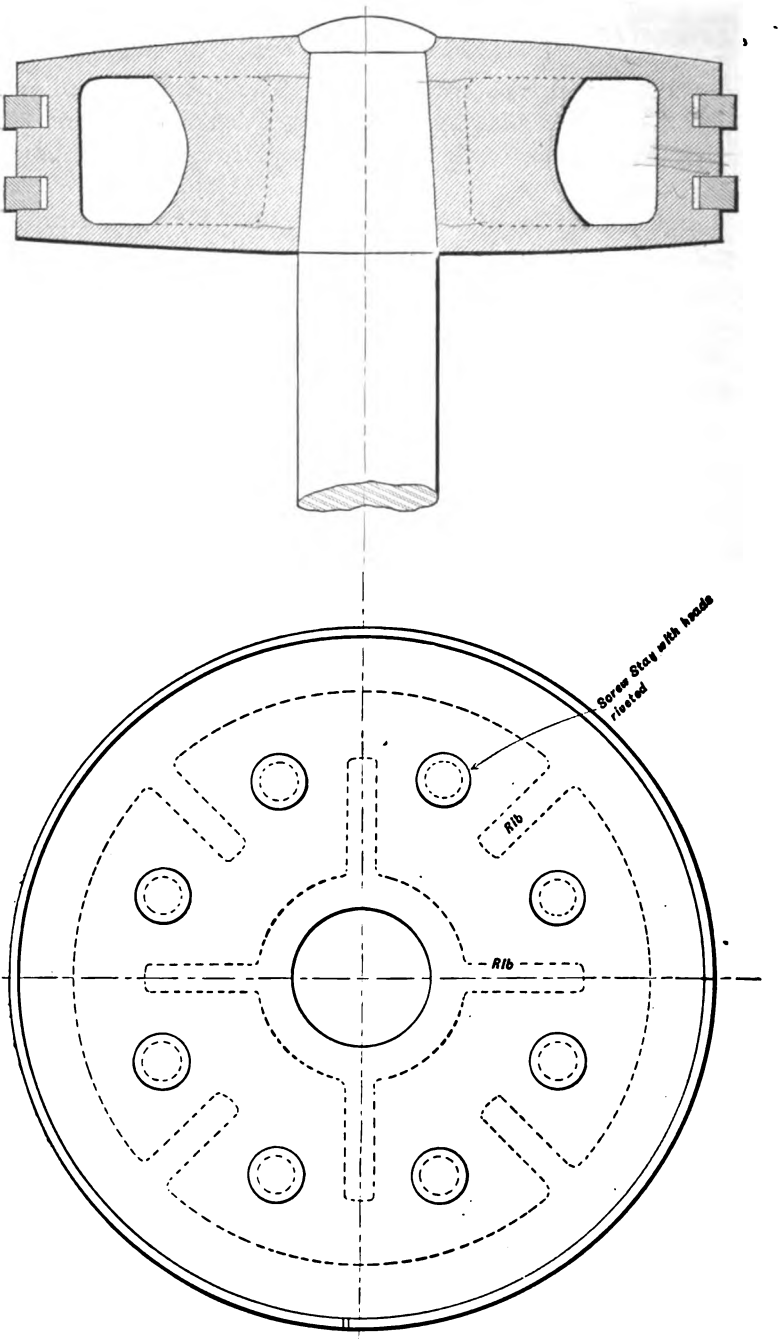

Fig. 3.

Digitized by Google

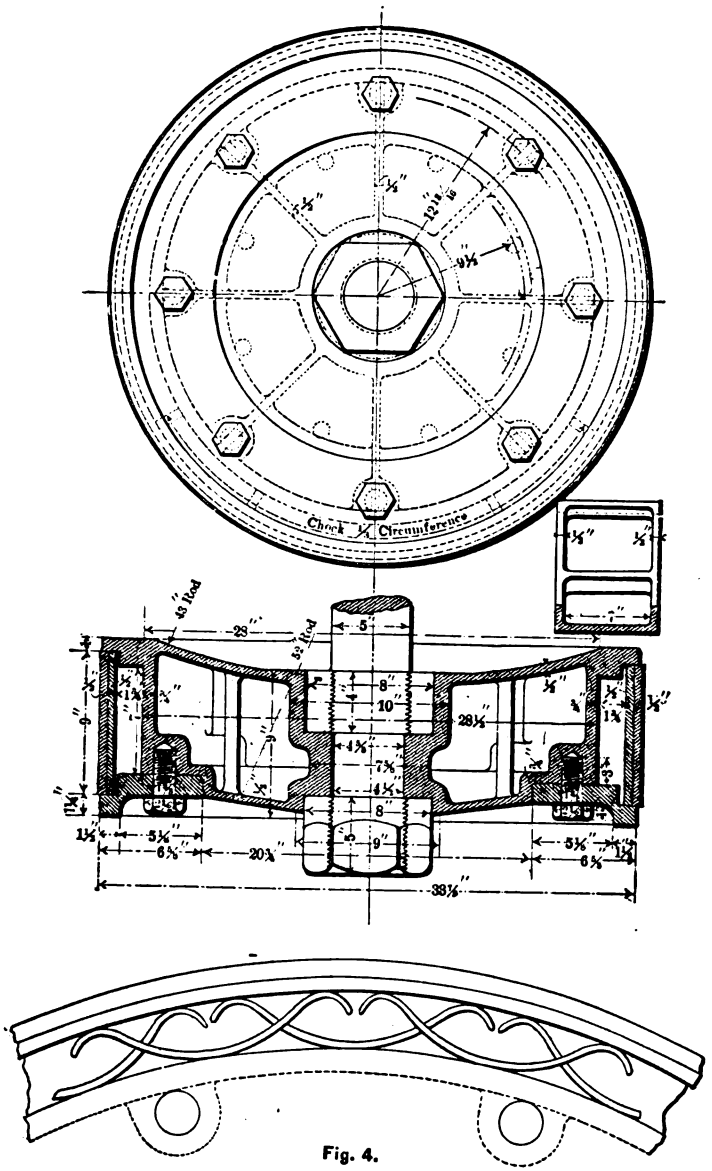

Fig. 4.

Digitized by Google

the thickness of plate *A*. The edges *F* are bent about the lines *xy* so as to hold and lock the nut. A good form of lock nut is shown in Fig. 17.

The *packing-rings* for small pistons are generally made in one piece, sometimes larger than the diameter of the piston,

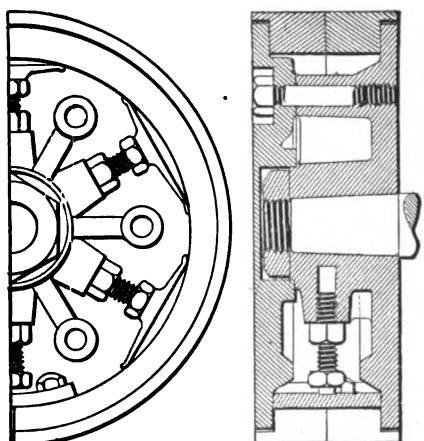

Fig. 5.

and sprung into place; and sometimes they are turned to the exact diameter required. In either case it is necessary to cut them, when no follower-plate is used, in order to place them into the packing spaces. These rings are shown in the various figures. In order to prevent steam from leaking past them, the ends are secured as shown in Figs. 7, 8, 9, and 17.

The packing-rings for large pistons, when a follower-plate is used, are shown in Figs. 4, 5, 6, 6*a*, and 13. In this case the rings are forced out against the cylinder by springs or steam. A form of *steam* packing is shown in Fig. 2. With steam packing in expansive engines the cylinder is worn unequally throughout its length. The packing-rings are made in parts. In Fig. 4 there are two thicknesses of rings, which are so placed that the joints are broken. In Fig. 13 the packing-ring is

Digitized by Google

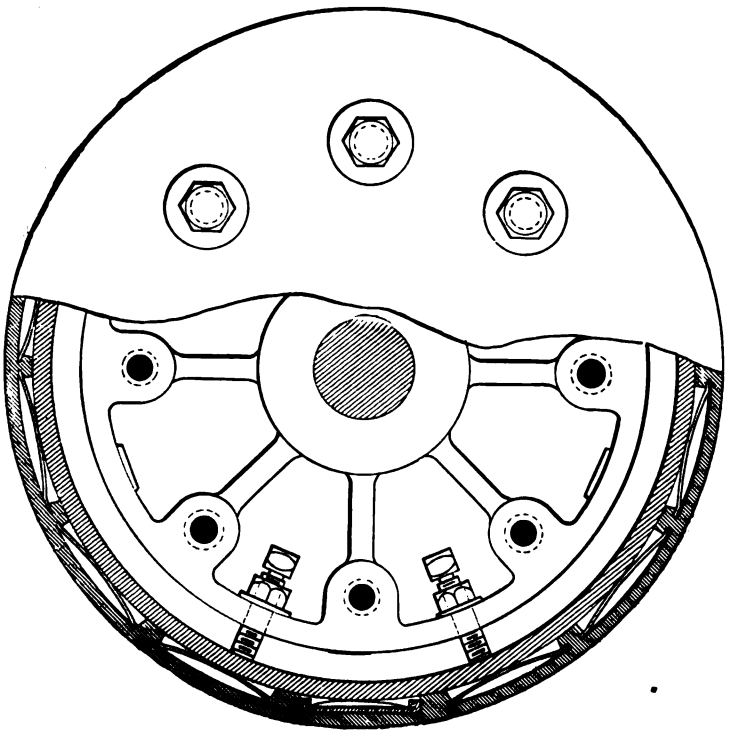

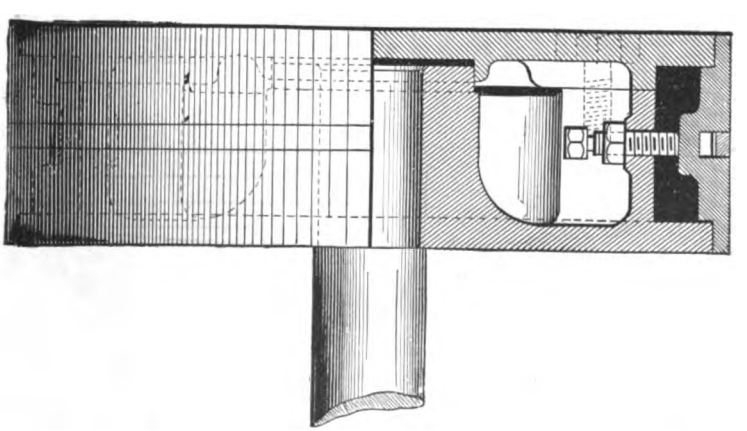

Fig. 6.

Digitized by Google

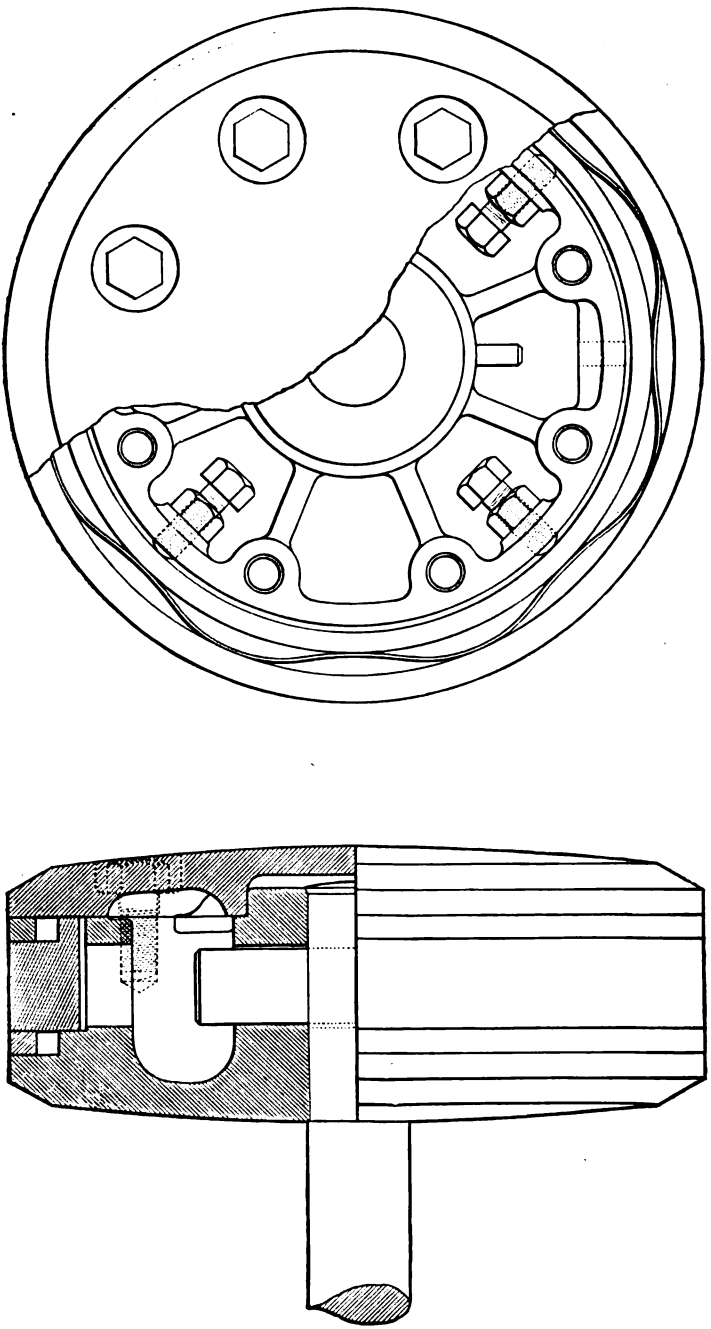

Fig. 6a.

Digitized by Google

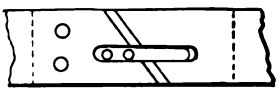

Fig. 7.

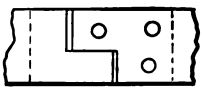

Fig. 8.

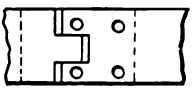

Fig. 9.

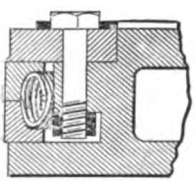

Fig. 10.

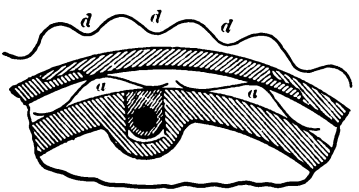

Fig. 13.

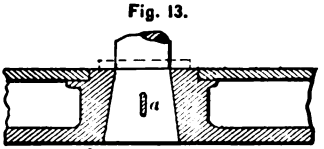

Fig. 14.

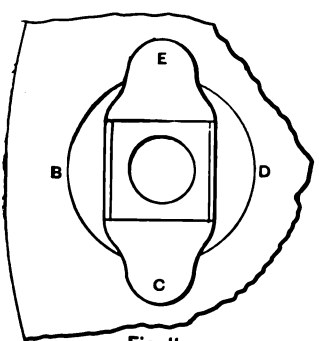

Fig. 11.

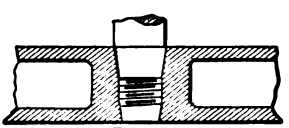

Fig. 15.

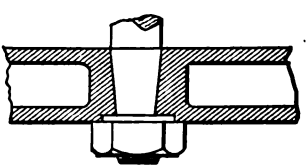

Fig 16.

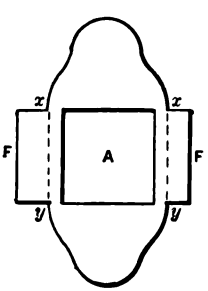

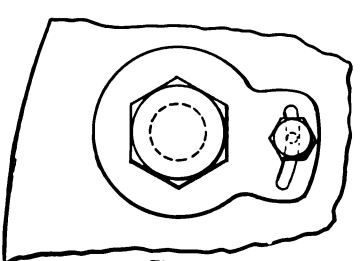

Fig. 12.

Digitized by Google

made in many parts, fitted together as shown. A similar form* is shown in Fig. 17. In Fig. 5 there are two rings, but only one thickness, and the joints are broken. In Figs. 6 and 6*a* the weight of the piston is supported by a large adjustable bearing ring, and smaller rings are used to make the joint tight.

The various forms of spring packing in use are shown in Figs. 4, 6, 6*a*, 10, 13, and 17. The old form, which is still used

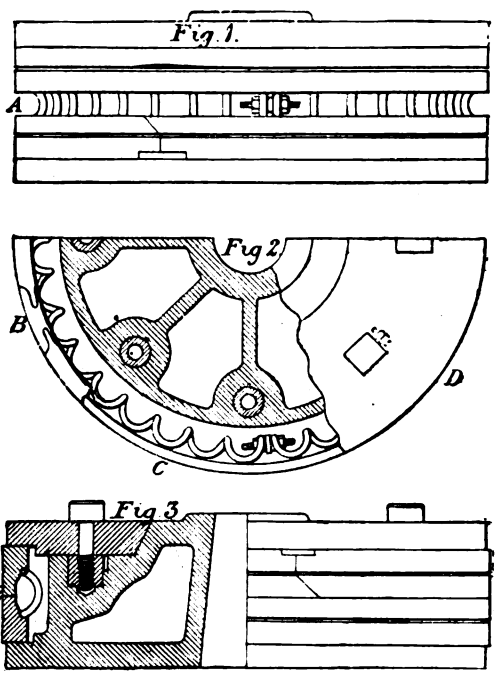

Fig. 17.—Lockwood and Carlisle's Piston Packing.

extensively, is like the steel coach-spring *a* in Figs. 13, 4, and 6. Sometimes this is replaced by the Cameron continuous steel ribbon, marked *d* in Fig. 13 (see also Fig. 6*a*). Another form is the Buckley spiral packing, shown in Fig. 10. This not only

* *Engineering*, xxxiii. 371.

Digitized by Google

presses the packing-rings out against the cylinder, but also presses them axially against the follower-plate and spider of the piston. The Lockwood and Carlisle packing shown in Fig. 17 is a combination of the kinds just mentioned.

The follower-plate bolts, if of iron, should always screw into brass nuts. These may be screwed as shown in Figs. 17, 13, 10, and 4. This is true for tap-bolts. When *stud* bolts are used, as in Fig. 5, it is usual to have brass nuts.

11. Design of Piston. *Empirical Methods.*—Prof. A. E. Seaton* gives the following as representing successful English practice for marine design, viz.:

Let D = diameter of the cylinder in inches;

p = effective pressure per sq. in. of piston;

$$C = \frac{D\sqrt{p}}{50} + 1 = \text{a constant multiplier.}$$

Then—

The thickness of the front of the piston near the boss	$= 0.2C.$
" " " " " " " rim	$= 0.17C.$
" " " back " "	$= 0.18C.$
" " " boss around the rod	$= 0.3C.$
" " " flange inside the packing-ring	$= 0.23C.$
" " " " at the edge	$= 0.25C.$
" " " packing-ring	$= 0.15C.$
" " " follower-plate at the edge	$= 0.23C.$
" " " " " inside packing-ring	$= 0.21C.$
" " " " " at the bolt-holes	$= 0.35C.$
" " " metal around the piston-edge	$= 0.25C.$
" breadth of packing-ring	$= 0.63C.$
" depth of piston at the centre	$= 1.4C.$
" lap of the follower-plate on the piston	$= 0.45C.$
" space between the piston body and the packing-ring	$= 0.3C.$

* Seaton's *Manual of Marine Engineering*, p. 136.

Digitized by Google

The diameter of the follower-plate bolts $= 0.1C + 0.25$ in.
" pitch " " " " $= 10$ diameters.
" number of ribs in the piston $= \frac{D + 20}{12}$,
" thickness " " " $= 0.18C$.

Prof. Marks* gives the following formula for the thickness of the piston-head:

$$t = \sqrt[4]{\text{stroke in inches} \times \text{diameter of the cylinder in inches}}.$$

12. Design of the Piston. *Analytical Methods.*—The packing-rings in a piston of a vertical engine are used simply to make a steam-tight joint, while in a horizontal engine the rings also support the piston, or at least a part of it, under ordinary conditions. The pressure, due to the weight of the piston, upon an area equal to 0.7 *of the diameter of the cylinder* $\times$ *breadth of ring face* should never exceed 200 pounds per square inch. The weight of the piston is frequently supported in part, or wholly, by a trunk or half-trunk, or by a prolonged piston-rod passing through the outer cylinder-head.

There must be sufficient stress exerted by the springs to keep the packing-rings against the walls of the cylinder, and thereby insure a tight joint. This pressure should be greater during admission of steam to the cylinder than during expansion. Since the springs exert a constant pressure, unnecessary work in overcoming the resistance of the springs is done during expansion. When steam packing is used, the cylinder is worn unequally in different parts of the stroke. The springs for a horizontal engine piston are replaced underneath the rod by a shoe in length from $\frac{1}{6}$ to $\frac{1}{3}$ of the periphery, as shown in Fig. 4. The shoe fills the space allowed for springs. In Figs. 5, 6, and 6*a* set-screws are used to keep the piston central.

The depth of the web in a cellular piston is usually equal to the breadth of the ring face.

---

* Marks' *The Proportions of the Steam-Engine.*

Digitized by Google

Let b = breadth of the ring face or depth of web in the piston, in inches;
t = thickness of the web, in inches;
r = radius of the boss, in inches;
D = diameter of the piston, in inches;
n = number of ribs or webs;
f = *safe* breaking-across strength of the metal used in the piston, in pounds per sq. inch;
$p_1 - p_2$ = maximum stress on the piston, in pounds per sq. inch.

The pressure on one web is

$$(p_1 - p_2)\left\{\frac{\frac{\pi D^2}{4} - \pi r^2}{n}\right\} = w,$$

and it is distributed over a sector of a circle, or approximately over a triangle whose centre of pressure is $\left(\frac{2}{3} \times \frac{D}{2} =\right)\frac{D}{3}$ from the centre of the piston. The arm or length of the beam loaded at one end and supported at the other is $\left(\frac{D}{3} - r =\right)h$. The thickness of the web is

$$t = \frac{wh}{fb^2} = \frac{\left(p_1 - p_2\right)\left[\frac{\pi D^2}{4} - \pi r^2\right]\left(\frac{D}{3} - r\right)}{nfb^2}.$$

Pistons, though usually made of cast-iron, are often made of composition* and cast-steel.

---

* English naval brass or composition is an alloy of 62 parts by weight of copper, 37 of zinc, and 1 of tin. U. S. Navy composition for bearing-brasses is 6 parts by weight of copper, ½ part zinc, and 1 part tin. (See table in § 84.)

Digitized by Google

The following table* will be of interest, viz.:

COMPARATIVE WEIGHTS OF CAST-STEEL AND CAST-IRON MARINE PISTON.

H. B. M. Vessel, Compound Engine of	Diameter of Piston in Inches.	Description.	Material used.	Weight in Pounds.	Difference in favor of Cast Steel—Pounds.	Revolutions per Minute.	Piston Speed in Feet per Minute.	Boiler Pressure in Pounds per sq. inch.
Leander†	78	Large piston.	Steel	3584	2016	90	720	90
Audacious and class....	78	Both pistons of same diam.	Iron	5600		70	420	31
Leander†	42	Small piston..	Steel	1680	560	90	720	90
Assistance	42	Large piston.	Iron	2240		80.8	367	60
Espiegle	38	Small piston..	Steel	1092	Mean 364	121	484	65
Miranda	38	" ..	"	840	966	124	496	60
Pegasus	38	" ..	Iron	1400	Mean 1330	107	428	60
Dragon	38	" ..	"	1260		104	416	62

13. EXAMPLE.—Design a cast-iron piston for a horizontal engine from the data given in § 9.

$p_1 - p_3' = 84 - 2.5 = 81.5$ lbs; $D = 36.3$ ins.;

$r = 2$ inches (assumed for the present: see Chapter IX);

$n = 6$ (assumed);

$f = 3000$, the safe breaking-across strength of cast-iron.

The weight of this piston will be about 1400 lbs., since its diameter is about the same as that for the *Pegasus* in the table of § 12.

By Prof. Seaton's formula in § 11,

$$C = \frac{36.3}{50}\sqrt{81.5} + 1 = 7.56 \text{ inches.}$$

Breadth of ring face $= 0.63C = 0.63 \times 7.56 = 4.76$ inches $= b$,

and t = thickness of the web $= 0.18C = 1.36$ inches.

* From a paper by J. R. Ravenhill on "The Use of Steel in Shipbuilding," read before the *Instit. of Nav. Arch.* 1881, *Engineering*, xxxi. 406.

† The weight of the *Leander's* pistons are estimated. The remainder are from actual weights

Digitized by Google

If the weight of the piston (1400 lbs.) rests on the wall of the cylinder, and Seaton's value for the breadth of ring face be assumed, the piston will rest on the area

$$0.7 \times 36.3 \times 4.76 = 120.95 \text{ sq. ins.},$$

and the intensity of the load will be

$$1400 \div 120.95 = 11.57 \text{ lbs.},$$

while by § 12 it might approach 200 lbs. A formula much used in this country is breadth of ring face

$$= 0.15 \times \text{diameter of cylinder},$$

which gives $b = 5.45$.

Prof. Marks' formula, § 11, gives $b = \sqrt[4]{36.3 \times 24} = 5.43$. The computed results of b are

$$4.76, \qquad 5.45, \qquad 5.43.$$

They illustrate the difference between existing methods of design.

Taking five inches for the breadth of ring face, the thickness of the webs will be

$$\frac{81.5\left(1036.6 - 12.68\right)\left(\frac{36.3}{3} - 2\right)}{6 \times 3000 \times (5)^2} = 2 \text{ inches (nearly).}$$

14. Cylinder Design.* *Material Used.*—Cast-iron is used almost exclusively for steam-cylinders. The *working cylinder* must consist of a tough, close-grained casting, the surface being as hard as can be conveniently cut. It usually consists of a mixture of close-grained hard scrap, No. 3 pig, and cold-blast iron. In case the cylinder is steam-jacketed, and the working cylinder is a mere bushing, the outer cylinder or casing need not be hard, and can be made by omitting the scrap-iron.

Cylinder-head Thickness.—Cylinders usually have one head

* This article was written by the author for *Mechanics*, June 1888.

Digitized by Google

for *large* cylinders using steam under 100 lbs. gauge pressure; and

$$0.003D\sqrt{P} \quad . \quad . \quad . \quad . \quad . \quad . \quad . \quad . \quad . \quad . \quad (5)$$

for *small* cylinders.

Jacketed Cylinders.—The best plan with a steam-jacketed cylinder is to cast the steam-ports with the jacket, and have the working cylinder a mere bushing secured by screws to the fixed head of the cylinder, and left free to expand at the other end. Since the temperature of the jacket must be, at least, as high as that of the initial steam in the cylinder, the greatest stress is exerted upon the bushing when there is the least pressure in the cylinder, and this stress tends to produce a collapse. But as the crushing strength of cast-iron is five to six times the tensile, it will have ample resistance to crushing, if designed to sustain an internal bursting stress when the jacket is filled with air. Hence the formulæ (3), (4), (5), will apply. But since the bushing is always made of a tougher material than is the jacket, Seaton's formula for the bushing,

$$\frac{PD + 500}{2500} = \text{thickness}, \quad . \quad . \quad . \quad . \quad . \quad (6)$$

will give a better result, and is recommended.

If the axis of the cylinder is vertical, no stress is exerted upon the bushing other than that of the steam; but when the axis is horizontal, the bushing supports the weight of itself and the piston. It would then be in the condition of a beam supported at the ends and loaded. In order to give requisite stiffness for a horizontal bushing, the outside of the bushing and the inside of the jacket have right- and left-handed helical webs, respectively, cast on them, so that the load is supported at many points.

It is bad practice, with large cylinders, to cast the casing and bushing as one piece, as the inner wall will be subjected to a wider range of temperatures than the outer, so that a stress will be exerted on the outer cylinder by the greater expansion of the bushing. This objection was, however, overcome by

Digitized by Google

the late Mr. George H. Corliss by swelling the outer thickness about the middle of the cylinder's length.

Whenever the two cylinders are made in two parts, it is necessary to make a steam-tight joint at the free end of the bushing. This is done in various ways, but frequently the joint is made so tight that there is left no space for free expansion of the bush over the casing. In such a case the bushing has no special advantages. This is likely to occur only with long-stroke engines. To overcome this objection, Mr. E. D. Leavitt, Jr., casts the outer cylinder in two parts, and connects them by a swelled copper joint, extending circumferentially around them.

Fig. 18 is a drawing (from *Engineering*, xxii.) of the high-pressure jacketed cylinder of the U. S. S. *Nipsic*. The flat surfaces are to be proportioned by formulæ given in Chapter IV. The jacket-joint is made by brass or Babbitt metal rings which are forced into place by the screws, the screws abutting against the inside of the cylinder-head. The head has a manhole. In Fig. 60 is illustrated a form of plain cylinder.

15. EXAMPLE.—Design the cylinder and cylinder-head for $D = 37.25$, $P = 69$ lbs.

$$\text{Thickness of cylinder-head} = \frac{37.25 \times 69 + 500}{2000}$$

$$= 1.54 \text{ inches (Seaton, § 11).}$$

$$\text{Thickness of cylinder-head at flange} = \frac{37.25 \times 69 + 500}{1500}$$

$$= 2.05 \text{ inches.}$$

$$\text{Thickness of cylinder} = 0.03 \sqrt{37.25 \times 69}$$

$$= 1.52 \text{ (Van Buren).}$$

Diameter of bolt-circle for the cylinder-head $= 37.25 + 2 \times 1.52 + 2 \times$ diameter of the bolt $= 42$ inches, on the assumption that the bolts are about $\frac{7}{8}$ inch in diameter.

The bolts should not be more than 6 inches apart. If they are 5.5 inches pitch there will be 24 bolts required.

The safe tensile strength of the 24 bolts must be equal to the maximum load on the cylinder-head, or

Digitized by Google

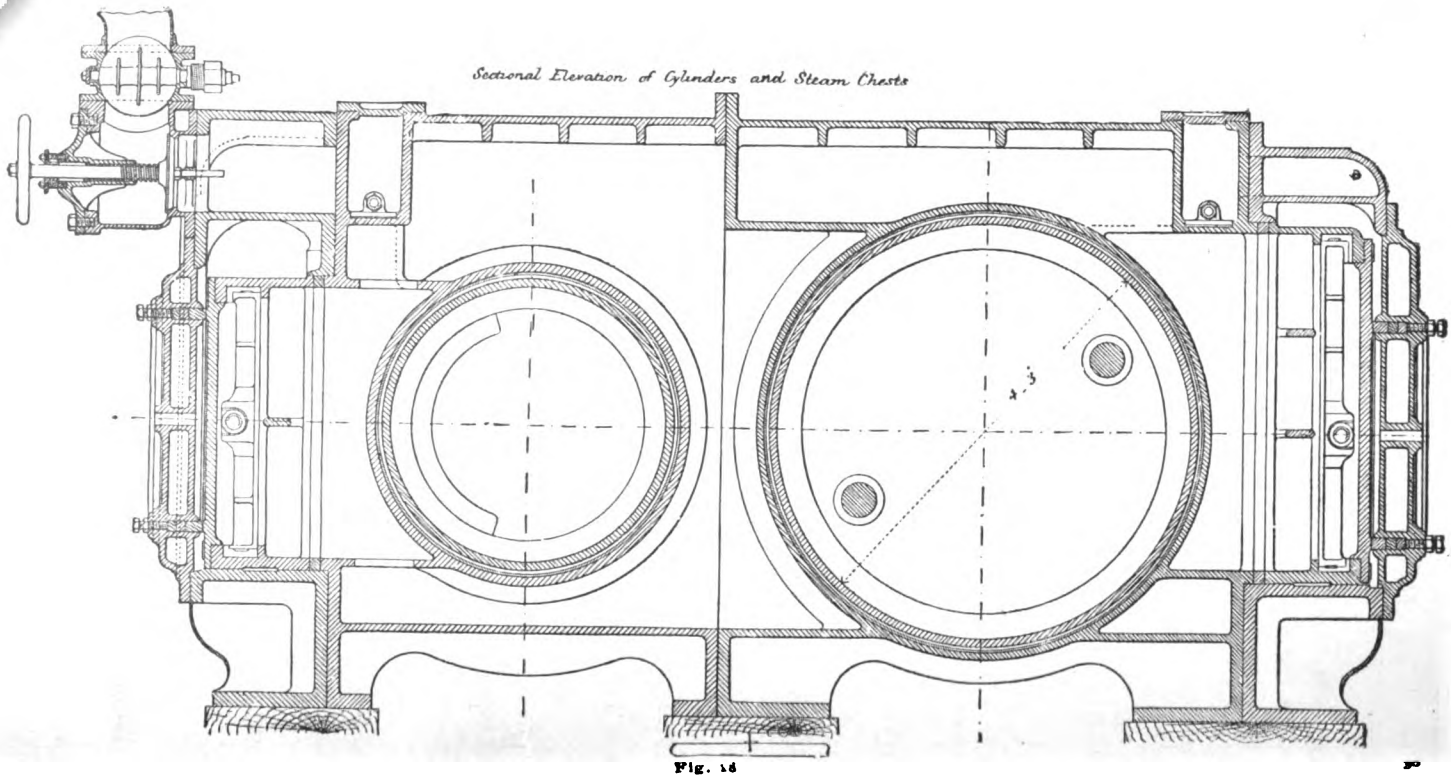

Fig. 18

Digitized by Google

$$24 \times \frac{\pi d^2}{4} \times 5000 = 69 \times 0.7854 \times (37.25)^2;$$

$d = 0.89$ inch = effective diameter of bolt.

In this, 5000 is taken as the safe tensile strength of wrought-iron, and no allowance is made for the counter-bore of the cylinder.

17. Design of Valve-ports.—The ports or passages through which the steam passes in going from the valve-chest to the cylinder must be short, direct, of easy curvature, and large enough to prevent "wire-drawing" of the steam.

Length of port = 0.8 diameter of cylinder;

Area of exhaust port = $\frac{3}{2}$ area of steam-port.

Steam flowing at the velocity of 6000 ft. per min. (see § 3, and Rankine's *Steam Engine*) passes through the steam-port into the cylinder, where the piston is moving at from 100 to 1000 ft. per min. Hence, applying the "law of continuity" of fluids to a current of steam,

$$a = \frac{AV}{v} = \frac{\text{area piston} \times \text{piston's speed}}{6000};$$

where a = area of valve-port in sq. inches;

A = " " piston in square inches;

v = velocity of steam flowing through the port = 6000 ft. per min.;

V = velocity of piston in ft. per min.

The length of the port is long in comparison with its width, and the steam passages short and direct, in order that the clearance volume may be small.

Digitized by Google

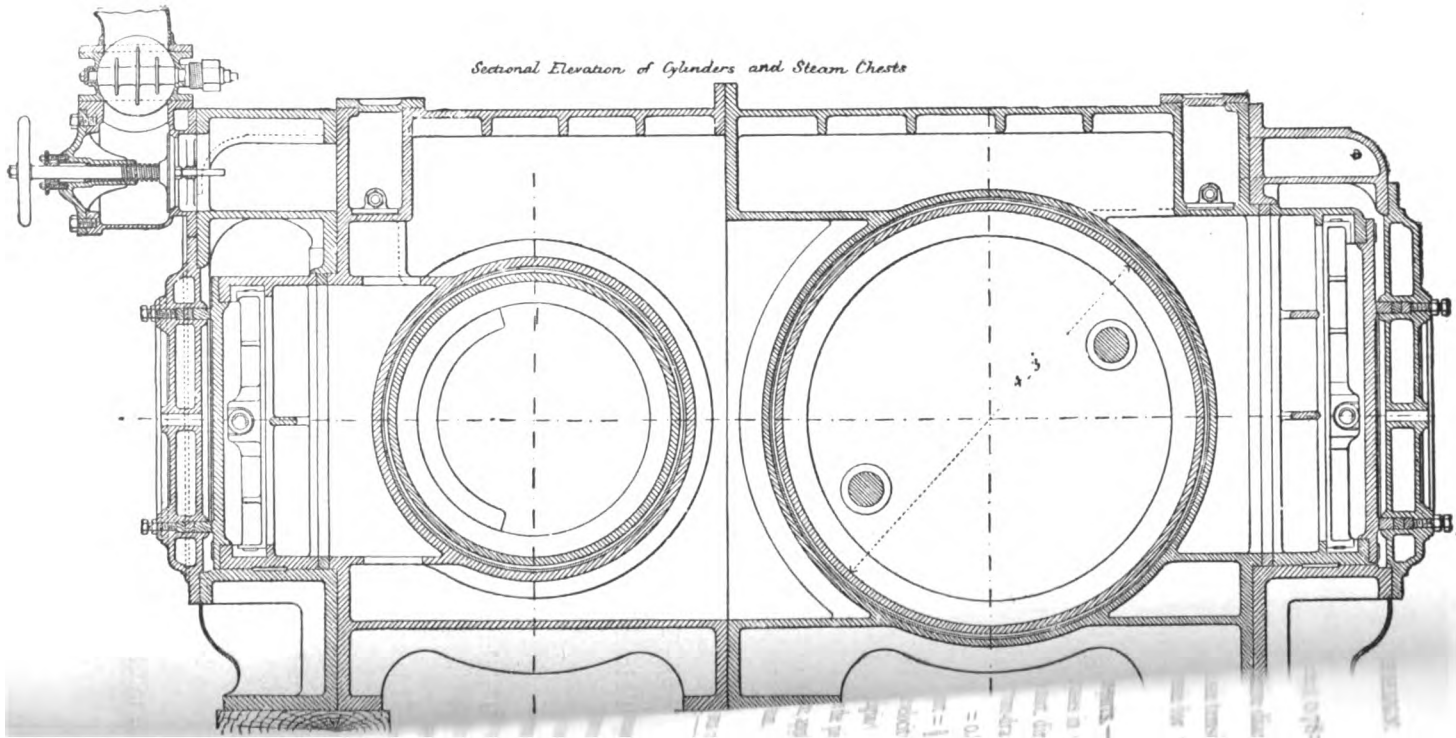

Digitized by Google

nt to a

barely
e least
of the
ection
, as is
icated
e the

ve be
with-
eccen-
5° be-
lled *a*

usted
travel
piston
valve
nd of
is set

n-rod,
gine is
nt.
ut off
e is on
le, i.e.,
ig. 21.
of the
stroke
ult we
crank,
of the
ig. 22.
crank,

Digitized by Google

CHAPTER II.

DESIGN OF SLIDE-VALVES.

18. Kinds of Valves.—A slide-valve regulates the admission and emission of steam to and from the cylinder. In order that it may be operated so as to produce the best effect, the steam space in the boiler must be large enough to give a uniform flow, and the communicating steam-pipe must not be too small or long, or have sharp bends. Valves are called oscillating, rotating, poppet, reciprocating, etc., according to their movement and form. The plane, reciprocating valve is called the slide-valve, and is in general use.

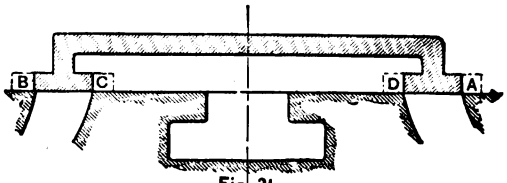

Fig. 21.

19. Square Slide-valves.—The slide-valve moves over a plane surface called the *valve-seat*. The under side of the valve is called its *face*. The square slide-valve has three ports in its seat, one at each end for the live steam to enter, and through which the steam is finally emitted as exhaust, and discharged into the central passage called the exhaust-port. The movement of the valve is controlled by an *eccentric*. This is a disk set eccentric to the shaft on which it is secured. The *throw of the eccentric* is the distance between the centre of the shaft and centre of the eccentric. The throw is usually equal to one

Digitized by Google

half the travel of the valve. The eccentric is equivalent to a crank whose arm is equal to the throw.

A valve is without steam or exhaust-lap when it barely covers the steam-ports when in mid position, so that the least motion in either direction will admit steam to one end of the cylinder and exhaust it from the other. *Lap* is the projection of the valve beyond the ports when in mid position, as is shown by dotted lines in Fig. 21. Outside lap, as indicated by the dotted lines *A* and *B*, is called *steam-lap;* while the inside lap, *C* and *D*, is called *exhaust-lap.*

If the piston be at the end of its stroke, and the valve be as shown by the full lines in Fig. 21 (i.e., if the valve be without steam- or exhaust-lap, and in mid position), and the eccentric be fastened to the shaft, there will be an angle of 90° between the eccentric and crank, and the valve will be called *a square valve.*

With a square valve the steam is admitted and exhausted throughout the entire stroke (provided the valve's travel equals twice the throw of the eccentric). When the piston moves from one end of the cylinder to the other, the valve moves, ahead of the piston, from mid position to the end of the valve stroke, and back again to mid. The eccentric is set ahead of the crank.

When the piston is at the end of its stroke, the piston-rod, connecting-rod, and crank are in a straight line, the engine is said to be on its *centre*, and the crank-pin is at a *dead-point.*

20. Expansion Slide-valve.—To make the valve cut off the admission of steam to the cylinder before the engine is on its centre, we must lengthen the valve on the steam side, i.e., add steam-lap as shown by the dotted lines *A* and *B* in Fig. 21. If we do not now set the eccentric more than 90° ahead of the crank, we shall have the piston traversing a part of its stroke before steam is admitted to drive it. To correct this fault we must move the eccentric still farther ahead of the crank, through an angle whose sine multiplied by the throw of the eccentric equals the steam-lap added. This is shown in Fig. 22.

In the figure, *O* is the centre of the shaft, *OR* the crank,

Digitized by Google

OP the eccentric arm, $QOR = 90°$, and $\overline{PQ}$ = steam-lap. Hence $\overline{PQ} = \overline{PO}$ sin POQ = throw of eccentric $\times$ sin POQ. POQ is called the *angle of lap*.

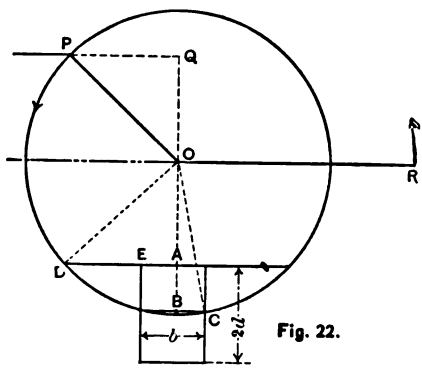

Fig. 22.

When the crank and eccentric are as shown in the figure, the exhaust-port is open a distance equal to the width of steam-lap added. If we make the exhaust-lap (C and D in Fig. 21) equal to the steam-lap, steam will be admitted to one end of the cylinder and exhaust from the other end at the beginning of the stroke. In this case the valve will be as shown in Fig. 23.

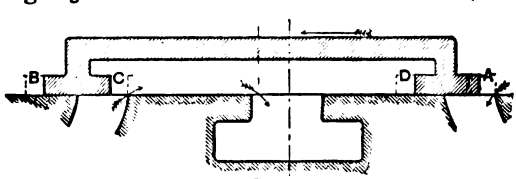

Fig. 23.

If we have given the square valve, shown in Fig. 21, enough lap to cut off at, say, one-half stroke, and the valve has the same steam- and exhaust-lap as shown in Fig. 23, we will also cut off the exhaust at half stroke, and the pent-up steam ahead of the piston will act as a seriously retarding force. Hence it will not do to have the steam- and exhaust-lap equal. If the exhaust- is less than the steam-lap the exhaust-port will not be closed till some time after the admission of live steam is cut off.

Digitized by Google

Lead is the distance the piston is from the end of its stroke when the steam-valve opens for admission; or it is the angle through which the eccentric has been set ahead to accomplish this; or, loosely speaking, it is the width of port opening when the engine is on its centre.

When a valve has lap and lead the angle between the eccentric and crank is 90° + angle due to lap + angle due to lead. The effect of lead is to admit steam before the last stroke of the piston is completed, i.e., to open the port earlier and close it earlier. The ratio and work of expansion of steam are increased. Lead does not change the width of port opening, but affects the time of such opening. If a valve have steam-lap added, the throw of the eccentric must be increased, i.e., the travel of the valve must be increased, to preserve the same port opening. Hence

Throw of eccentric = Steam-lap + Steam-port opening.
Travel of valve = Twice the throw of the eccentric.

21. Zeuner's Diagram for a Square Valve.—As an introduction to Zeuner's method of analyzing the action of the

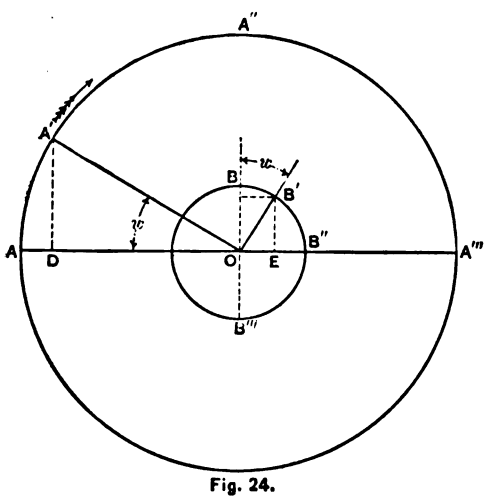

Fig. 24.

slide-valve, we will assume that the valve face is parallel to the axis of the cylinder, that the connecting and eccentric rods

Digitized by Google

are so long that the influence of angularity is removed. and that for a square slide-valve the angle between the crank and eccentric is 90°.

In Fig. 24 we will represent the crank orbit by the circle of radius OA and the eccentric orbit by the circle of radius OB, the scale being the same in each. The dead-centre points for the crank-pin are A and A'''. AA''' is the stroke of the engine, and OB the throw of the eccentric. When the crank is at OA the eccentric arm is at OB, or 90° in advance. As the crank moves through the angle marked ω, the centre of the eccentric moves from B to B'. Neglecting angularity of rods, the piston has moved from the end of its stroke through a distance AD, and the valve has moved from mid position a distance OE. The piston has then moved through a distance

$$AD = \frac{\text{stroke}}{2} \times \text{versin } \omega,$$

and the valve has moved from mid position through

$$OE = \text{Throw of eccentric} \times \sin \omega.$$

When the piston has completed half its stroke, i.e., when the crank-pin is at A'', the valve has moved through a distance OB'', i.e., through a distance equal to the throw of the eccentric, and the valve-port is wide open. When the crank-pin arrives at A''' the eccentric centre is at B''', and the valve is in mid position with the steam-ports closed.

For convenience in making a valve diagram the same circumference is used for the locus of both the crank-pin and eccentric centre. Different scales are used, as shown in Fig. 25. As before, when the piston moves from A to D the centre of the square valve moves from O to E. Describe a *valve circle* on OB (the throw of the eccentric), as a diameter. When the shaft turns through an angle ω, the valve circle is moved to $OEB'O$. The valve has moved through OE. E is the point in which the line OA''' cuts the valve circle. The triangle OEB' is right, because inscribed in a semi-circumference. The triangles OGB and $B'YO$ are also right, similar, and equal.

Digitized by Google

Whence $OE = OY =$ distance through which the valve has moved from mid position. Hence we need not draw the valve circle in the position $OEB'O$, for the travel can be measured on radius vector OY. We observe that OY is tangent to the valve circle $OEB'O$, and that the crank position when the valve

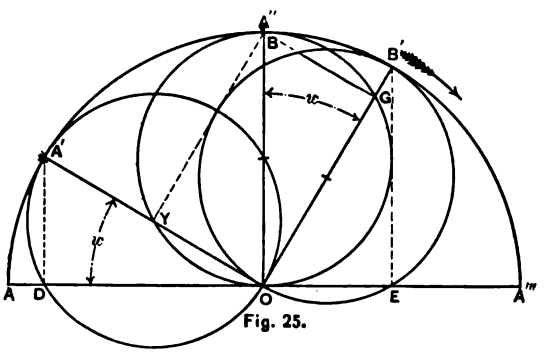

Fig. 25.

is at mid is OA or OA'''. Hence *when the valve is in mid position the position of the crank is determined by drawing a tangent through O to the valve circle.*

22. Zeuner's Diagram Considering Lap and Lead.—If the steam lap added to the valve is OD in Fig. 26, (on the scale that OB equals the throw of the eccentric,) the eccentric must be slipped ahead through the angle BOQ in order that the steam-port may open at the commencement of stroke. In this case the angle between the crank at OA and the eccentric arm at OQ is $90° +$ the angle BOQ. If we give lead to the valve, the steam-port must be partly uncovered when the crank-pin is at the dead-centre A. We must slip the eccentric still farther ahead from OQ to OE. The angle between the crank and eccentric is $90° + BOE$. The angle BOE is called the angular advance of the eccentric, and is represented by δ. Of course we have assumed the valve face and axis of the cylinder to be parallel, for otherwise the angular advance δ will be larger or smaller, according to the direction in which they are inclined, and to whether the valve is above or below the cylinder.

We observe that when the engine is on its centre the steam-

Digitized by Google

port is open a distance DF (which is often inaccurately called the steam-lead: see page 34).

With O as a centre and a radius equal to the lap OD, draw the arc $DMIR$. It is evident that the port will never be uncovered unless the throw of the eccentric is greater than the lap. Since OE is the throw of the eccentric, and this is equal to the steam-lap + the steam-port opening (see § 20), the vec-

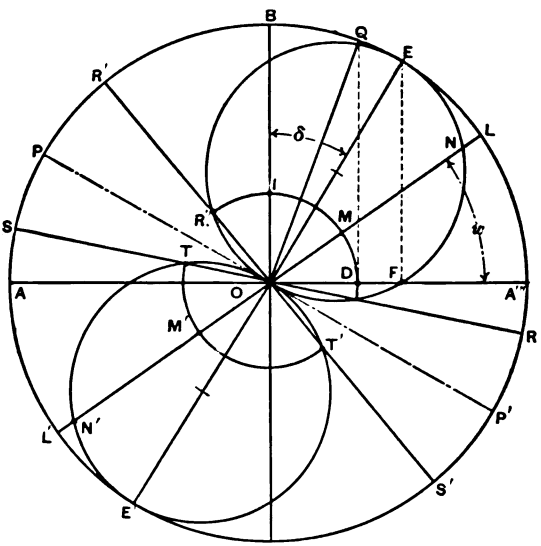

Fig. 26.

torial intercepts between the arcs $DMIR''$ and $FNEQR''$ measure the width of port openings for corresponding crank positions. Hence the port has its maximum opening when the crank is at OE. In § 21, Fig. 25, it was shown that when the crank moved through an angle ω, and the valve circle remained stationary, the corresponding movement of the valve OY is the radius vector of the valve circle for that position of the crank. Hence, in Fig. 26, when the valve has lap and lead and the crank is at OA''' the engine is on its centre and the width of port opening is DF. As the crank moves through ω to OL the width of port opening increases to MN. When the crank is at OE the port is wide open, as before stated. The radius OE represents

Digitized by Google

the travel of the valve, and on it the valve circle is drawn. The tangent line POP' represents the two positions of the crank when the valve is in mid position (see end of § 21).

Since the steam-port is wide open for crank position OE, the port at the other end of the cylinder will be wide open for exhausting. It is less confusing and more convenient to prolong EO to E', and represent the exhaust features of the valve on a valve circle described on OE'. Draw the exhaust-lap arc $TM'T'$. Prolong LO to L'. ON' is the distance the valve has moved from mid position when the crank-pin is at L, and $(ON' - OM' =)\ N'M'$ is the opening of the port for exhausting. When the crank is at OS the piston has nearly completed its stroke, and the port is about to open for exhaust. When the crank has moved around to OS', the exhaust is shut off and compression is about to begin. The piston compresses till the crank arrives at OR, when the port opens for admission. Steam was cut off when the crank was at OR'.

The distance OD = steam-lap, in Fig. 26, is equal to the width of the dotted portion A in Fig. 21; while the exhaust-lap, marked D, is equal to OT in Fig. 26.

The letter ξ will be used hereafter to denote the distance through which the valve has travelled from its mid position for an angular movement ω of the crank. That is, when the crank is at OP the valve is in mid position, and $\xi = O$; when crank is at OR, $\xi = OD$ = steam-lap; when at OA''', $\xi = OF$; at OE, ξ = throw of the eccentric, and the valve is at the end of its stroke.

Problems on the Expansion Slide-valve.—EXAMPLE 1. Neglecting angularity of eccentric and connecting rods, design a valve with the following data, giving indicator and valve diagram: Stroke of piston, 4 ft.; width of steam-port, 3 in.; steam to be admitted at commencement of stroke, and to be cut off when the piston has completed $\frac{5}{8}$ stroke; clearance, $\frac{1}{12}$ of stroke displacement; initial absolute pressure of steam in cylinder, 45 lbs.; simple condensing engine; vacuum, 22 in. of mercury; and compression to begin when the piston has 12 in. of its stroke yet to make. In Fig. 27 the scale for the crank orbit is

Digitized by Google

$AD = 4$ ft.; the scale for the eccentric orbit is $HB = 3$ in.; and the scale for pressures, 45 lbs. = 1 inch.

The steam enters at crank position OA, and closes at $\frac{5}{8}$ stroke, or OC; therefore the steam-port is wide open when the crank

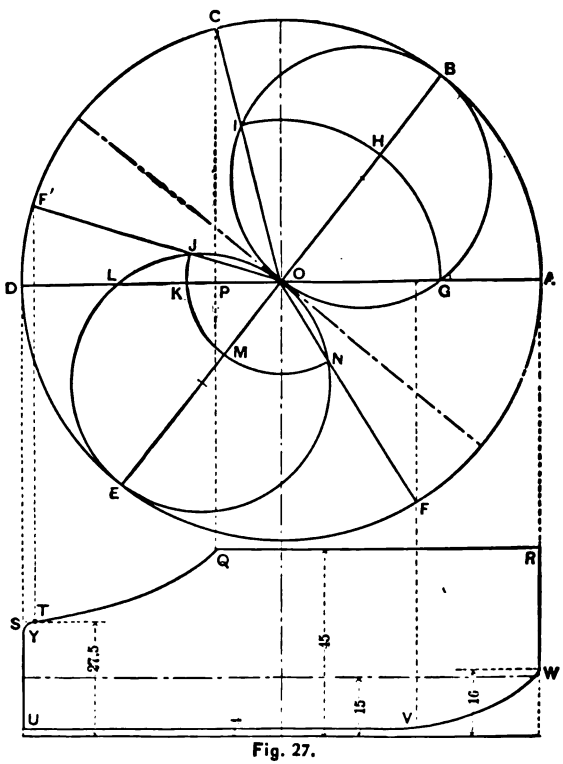

Fig. 27.

is midway between A and C, or at OB. OB is the valve-circle, OG is the steam-lap = OH, and HB is the 3-in. steam-port width given. On the scale that $BH = 3$ in., the lap $OH = 5$ in. The throw of the eccentric is $(OH + HB =)$ 8 in. The exhaust-valve closes when the crank is at OF, or 12 in. from the end of the stroke, compressing steam of $\left(\frac{30 - 22}{2} =\right)$ 4 lbs. pressure to $\left(4 \times \frac{12 + 4}{4} =\right)$ 16 pounds.

Digitized by Google

ON is the exhaust-lap = 2 in. The port opens for exhaust when the crank is at *OF'*, or 1 in. from the end of the stroke.

EXAMPLE 2. Draw valve and indicator diagrams, from the data given in Example 1, when the lap remains the same, and

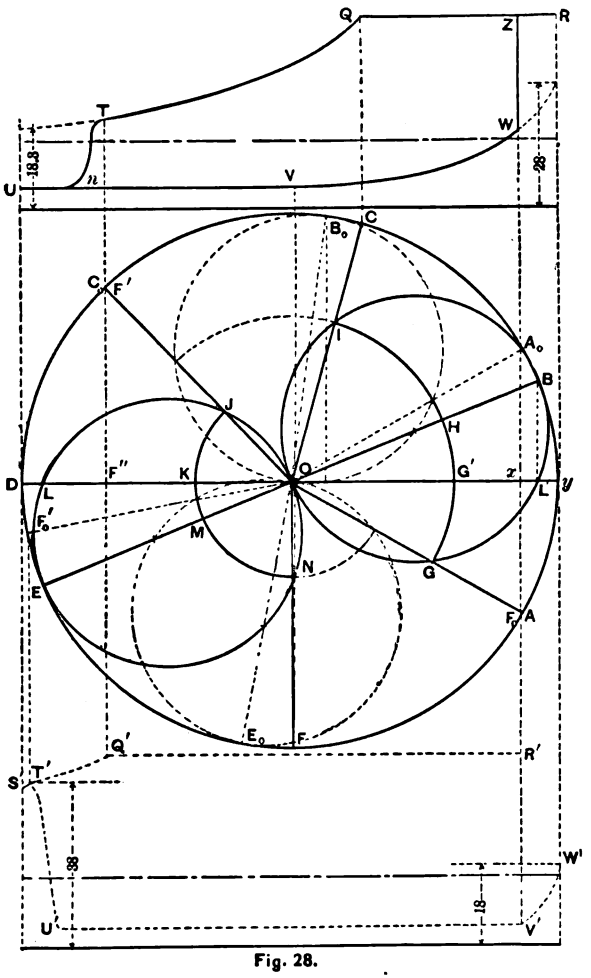

Fig. 28.

the eccentric has slipped, first, ahead 30°, and second, backward 30°.

First Case, or when the eccentric has slipped ahead 30°.—

Digitized by Google

Steam is now admitted when the crank is at OA, Fig. 28, and the lead line WZR is traced in the *upper* indicator-diagram. When the crank is at OB the steam-port is wide open; and when at OC the steam is cut off, giving the admission line RQ. The exhaust opens when the crank is at OF', giving the expansion line QT. The release line TnU is drawn while the crank moves from OF' to OD. At crank position OF the exhaust steam is cut off, leaving the vacuum line UV. As the crank moves forward to OA the compression line VW is traced. Steam is then readmitted to the cylinder. The steam- and exhaust-lap are the same as in Fig. 27. Steam lead is the distance xy, i.e., the piston is at that distance from the end of the stroke when steam is admitted. Similarly, the exhaust lead is DF''.

Second Case, or when the eccentric has slipped backward 30°. —This is represented by the dotted valve-circles and the *lower* indicator-diagram. After the piston has completed a distance xy of its stroke (i.e., with a *negative* steam lead of xy), the crank is at OA_1, and steam is admitted. The valve-port is wide open for admission when the crank is at OB_1, and closed when the crank is at OC_1. The admission line $R'Q'$ is traced. Expansion now begins and continues to the end of the stroke, giving the expansion line $Q'S'$. The exhaust-port is still closed, and as the piston makes its return stroke, the steam, instead of being released, is compressed in the expansion curve to T', when the exhaust-port is opened, and release begins. The crank is now at OF_1'. As the piston continues to move there is a rapid fall in the back pressure until the resistance is reduced to 4 pounds, giving the release line $T'U''$. The vacuum line $U''V''$ is then traced. The exhaust is cut off when the crank arrives at OF_1, and compression begins and continues for the remainder of the stroke, giving the compression curve $V''W''$. Steam not being admitted, the piston starts on another stroke with a driving force represented by the curve $W''V''$. When the crank has swept through 30° to OA_1, the live steam enters, and the operations just described are repeated.

EXAMPLE 3. Direct-acting engine of 3 ft. stroke: piston area, 1000 sq. in.; clearance, $\frac{1}{12}$ of stroke displacement; initial

Digitized by Google

pressure of steam is 30 lbs. absolute; back pressure, 4 lbs. absolute; revolutions of crank, 60 per min.; length of each valve-port, 30 inches; connecting-rod, 6 ft. long. Neglect angularity of eccentric-rods; steam is admitted when the piston is $\frac{1}{2}$ in. from either end of stroke; compression begins when the piston is 12 in. from end of either stroke; steam is cut off as the stroke from the outer end of the cylinder has been two-thirds completed. Draw valve and indicator diagrams; find point of cut-off on the other stroke; the steam- and exhaust-lap of the valve at each end; and sketch a double-ported slide-valve to satisfy these conditions.

From § 17 the total area of port-opening at each end of the cylinder is

$$a = \frac{AV}{v} = \frac{1000 \times 2 \times 3 \times 60}{6000} = 60 \text{ sq. in.}$$

The area of each of the ports for the double-ported valve is 30 sq. in. Since the length of each port is 30 inches, the width of each separate steam-port is 1 inch, and the exhaust-port is $\left(\frac{3}{2}(1+1) =\right)$ 3 inches wide.

Since a double-ported valve is a device to save space and to reduce its travel, we may say that it is equivalent to *two* equal simple valves of the same stroke, each having one half of the total port-opening. Fig. 29 illustrates this example. The upper part of this figure is a line sketch of the given engine. In the valve-diagram, A' and C' are laid off $\frac{1}{2}$ in. from ends of stroke. With a centre on $C'A'$ produced, draw an arc $A'A$ with a radius equal to the length of the connecting-rod, 6 ft. Then OA is the crank position for admission at the outer end. Lay off xB' equal to two thirds of the stroke, and sweep in the arc $B'B$. Then OB is the crank position for the cut-off from the outer end. OG is the crank position when the port is wide open for admission. HO is the required steam-lap for the outer end of the valve. On the scale that GH is 1 in. (the width of port-opening), HO is 1.22 in., and the throw of the eccentric is $(1.22 + 1 =)$ 2.22 in., which is also the half-travel of the valve.

Digitized by Google

Since compression begins at 12 in. from the end of the stroke, lay off the distance equal to xF', sweep in the arc $F'F$, draw crank position OF, and the outer exhaust-lap circle of radius yO. Then the release begins when the crank is at OE, and the piston has completed the portion xE' of its stroke. The dotted indica-

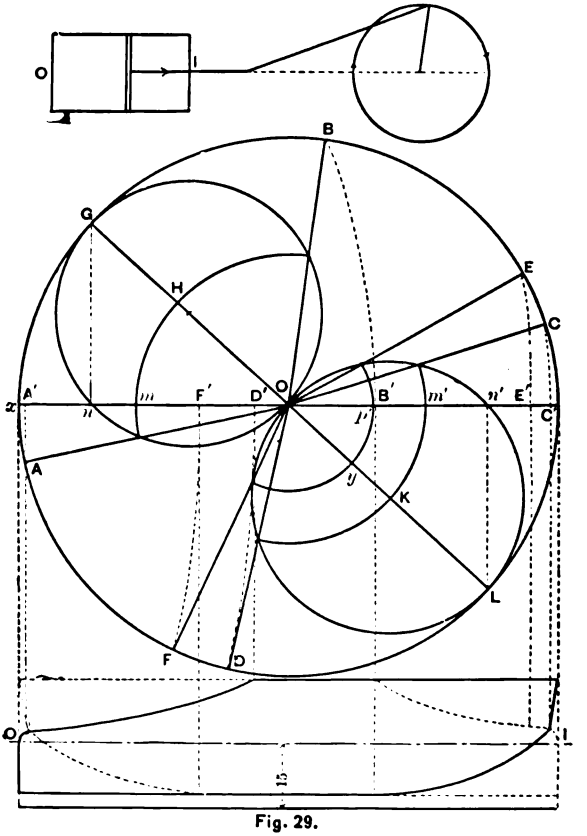

Fig. 29.

tor-diagram is for the stroke from the outer end of the cylinder. Similarly the other indicator-card is determined as shown by the full lines. We have the following measurements:

Exhaust-lap at the outer end of the valve = 0.74 in. = yO;
Steam-lap at the outer end of the valve = 1.22 in. = HO;

Digitized by Google

Steam-lap at the inner end of the valve = 1.11 in. = KO;
Exhaust-lap at the inner end of the valve = 1.22 in. = HC;
Point of cut-off for stroke from inner end = 20 in.

Fig. 30 is a sketch, from Seaton's *Manual of Marine Engineering*, of this valve.

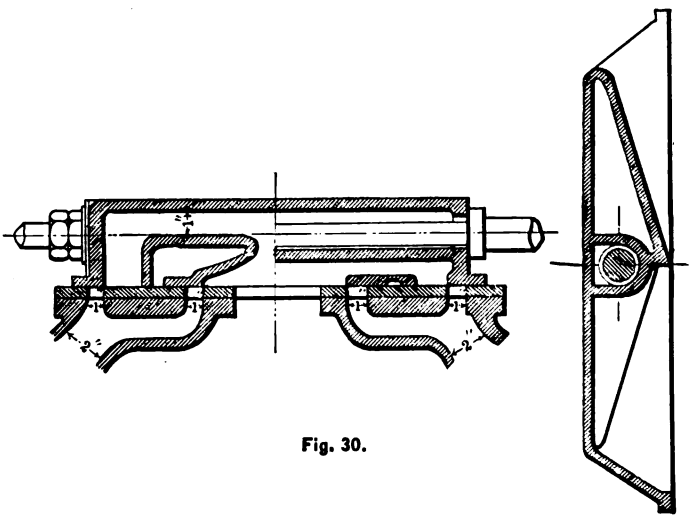

Fig. 30.

EXAMPLE 4. Fig. 31 is a sketch of a valve in use. The stroke of the piston is 36 in.; throw of the eccentric, 3 in.; length of the connecting-rod, 72 in.; clearance, $\frac{1}{12}$ of the stroke-displacement; the steam-port is open $\frac{1}{4}$ in. when the engine is on either centre; initial absolute pressure of steam, 45 lbs. per square inch: and the back pressure, 4 lbs. Required the point of cut-off for each stroke, position of the piston when the steam-port

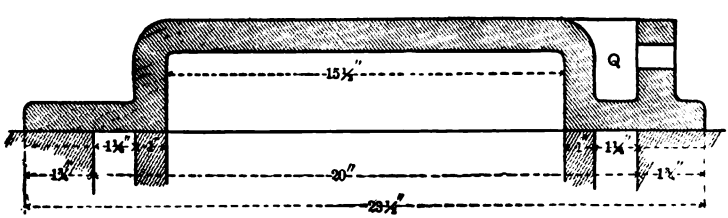

Fig. 31.

Digitized by Google

opens and closes, and the position of the piston when the exhaust begins.

In Fig. 32, A, draw the steam- and exhaust-lap circles with radii of $1\frac{3}{4}$ and 1 in. respectively, as given in Fig. 31. Then lay off from x and y a distance of $\frac{1}{4}$ in. (to the scale that $OB = 3$ inches, the given throw of the eccentric) for the port-opening when the engine is on its centres. Erect perpendiculars at B' and H'; and locate B and H, the positions for the crank-pin when the port is wide open. Draw the valve-diagrams and the positions of the crank as marked. With radius of 72 in., the length of the connecting-rod, sweep in the arcs shown, and ascertain the corresponding positions of the piston. From the figure, $ac = 24$, $ja' = 11.4$, $gi = 18.6$, and $dg' = 7.5$ in.

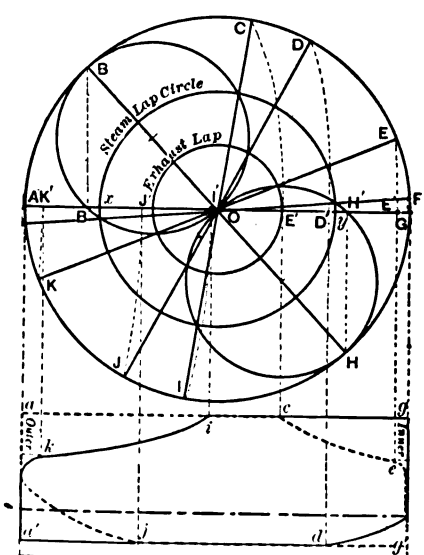

Fig. 32, A.

23. The Allen Valve.—It was shown in the preceding sections that the travel of the valve is changed as the cut-off is made earlier, i.e., we must have a longer throw of eccentric for an earlier cut-off. This increase in throw necessitates an increase in length of eccentric-rods, for otherwise the prejudicial

Digitized by Google

effects of angularity of rods would become excessive. We saw also that the evils just mentioned could be partly avoided by having the lap features different at the ends of the valve. The

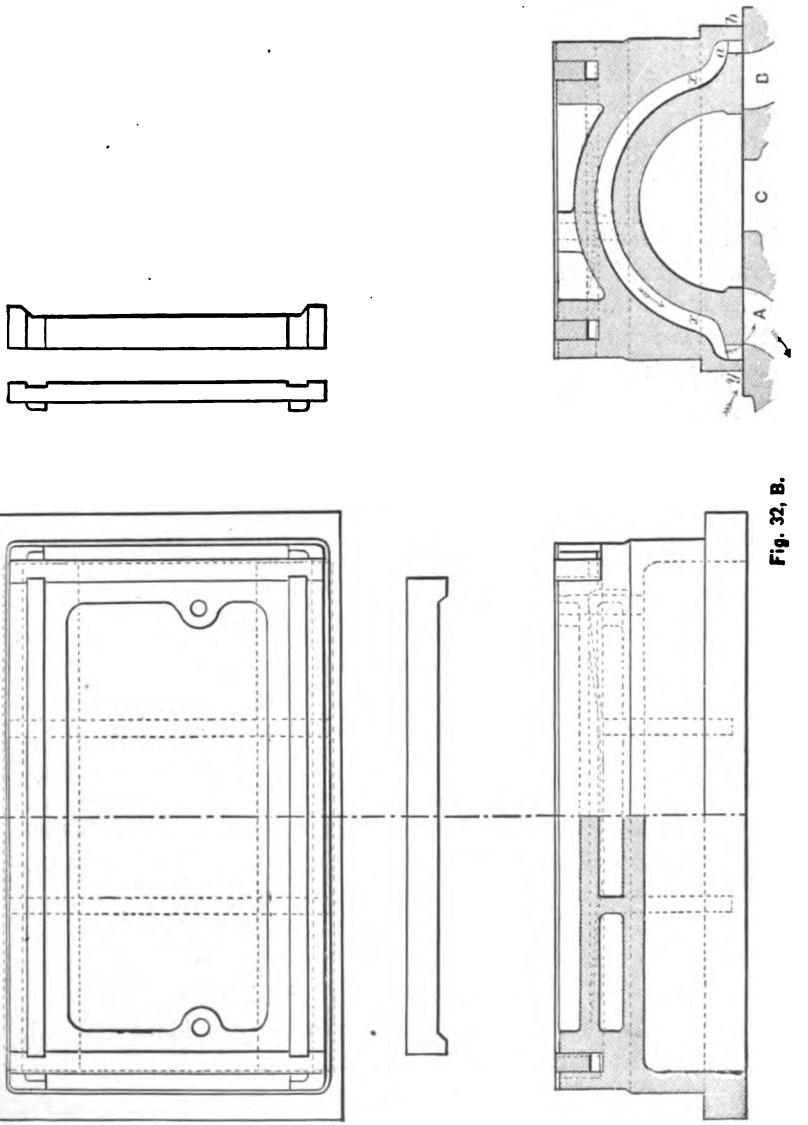

Fig. 32, B.

Digitized by Google

Allen valve,* shown in Fig. 32, B, is a device to remedy these objectionable features of the simple valve. *With it the steam-port is opened sooner, remains open longer, and is closed more quickly than with the simple slide.* Referring to the figure, the port *xx*, called the auxiliary port, is used as a steam-port, and *never* as an exhaust-port. Steam is admitted to the main port *A* through *xx* and the edge *y* of the valve, as indicated by the arrows, whenever the valve has moved from mid-position towards *B*.

When the crank is at the dead-centre the valve has moved from mid-position so that the edge *y* of the valve is over the outer edge of the main port *A*, and steam is about to be admitted to *A* through *xx* and the edge *y*. When the eccentric is at its dead-centre, the valve is at the end of its travel, and the port is open its maximum. In this latter position the port is still covered by the distance equal to *ab*, so that the effective width of port is *A* or *B*, reduced by the width *ab*. The steam-lap is the distance from the outer edge of the valve to the inner edge of the auxiliary port, as shown in the figure. When the valve moves, say towards *B*, from mid-position through this distance, the admission of steam to *A* begins simultaneously through *xx* and the edge *y* of the valve. When the valve has moved so that the inner edges of the auxiliary and main ports are coincident, the port is open its maximum distance. If the valve is not yet at the end of its travel, the auxiliary port *xx* is partly or wholly closed, while the opening at the end of the valve at *y* is correspondingly increased, so that the maximum width of opening for *A* is not changed. The valve now reverses its direction of motion, and begins to move to cut off the admission of steam. The port begins to close *after* the inner edges of the main and auxiliary ports are coincident, and continues to do so until the edge *y* coincides with the outer edge of *A*, when steam is cut off. The thickness of the metal at *b* or *y* is made no greater than is required for strength.

The exhaust features of the Allen valve are identical with

* The drawing was made by the Baldwin Locomotive Works, Philadelphia, Pa.

Digitized by Google

those of a simple slide. The diagrams are also similar to those for the simple valve, as illustrated in the last section. The valve-gear is described in § 29.

24. The Gozenbach or Gridiron Valve—A Variable Cut-off.—In Chapter III. is shown the manner in which the slide expansion-valve may be made a variable cut-off. This is accomplished by reducing the stroke of the valve by a link-gear or otherwise. In each case cutting off the admission of steam by reducing the travel of the valve results in also cutting off the exhaust, and hence increasing the mean total back pressure. This may become excessive. It is more economical to use an independent cut-off valve when the ratio of expansion is to exceed two. As the lap is increased in an ordinary valve the ratio of expansion is also increased. This fact is taken advantage of in the gridiron-valve, and with it any amount of lap can be added at pleasure.

The gridiron-valve gear is composed of two valves—one for regulating the expansion, and the other for controlling the lead and exhaust features. The former is the *expansion* and the latter the *distributing* valve. In Fig. 33 is a longitudinal sec-

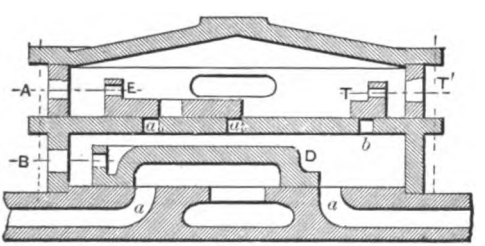

Fig. 33.

tion of this valve (see also Fig. 69). D is the distributing-valve; E is the expansion-valve in a separate steam-chest; a_0, a_0 are the expansion-valve ports through which the steam passes to the main or distributing-valve chest; A and B are valve stems; b is a port similar to a_0, but worked by the tail or pass-over valve T, so that in case the engine is stopped with the ports a_0, a_0 closed, the port b may be opened by hand and thus admit steam into the distributing-chest.

Digitized by Google

Each valve is worked by its own eccentric. In case the engine is to be reversed, the reversing gear is attached to the distributing-valve. The expansion-valve may be made to cut off the admission between almost any desired limits, or it can be thrown out of use entirely, so that the engine will be controlled by the distributing-valve only.

In the simple slide-valve motion the ports are gradually opened and closed, so that there is more or less "wire-drawing" of the steam. This is partly remedied by the gridiron-valve, as the combined area of all the ports a_0, a_0 is greater than that of the main port a, or $\Sigma \cdot a_0 > a$.

Fig. 34 shows the expansion-valve in mid-position. On

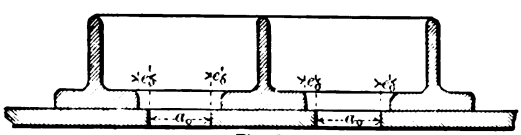

Fig. 34.

page 38, ξ was used to denote the distance the valve had moved from its mid-position by a crank movement ω. Let ξ_0 represent the same for the expansion-valve. This is shown in Fig. 35. Denoting by a_1 the width of the expansion-port open-

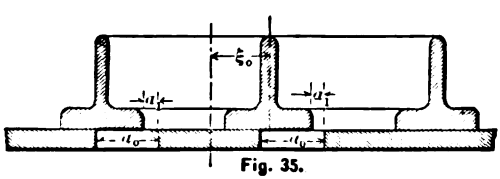

Fig. 35.

ing, we have

$$\xi_0 + a_1 = e_0 + a_0,$$

where e_0 = the half-difference in width between the opening in the expansion-valve and its port; whence

$$a_1 = e_0 + a_0 - \xi_0.$$

Here e_0 and a_0 are constants, and ξ_0 may vary with the travel of the expansion-valve.

Digitized by Google

In Fig. 36, *OB* is the crank position for the engine on its centre. The expansion-valve's eccentric is at *OD*, or 90° from *OB*. Draw a valve-circle as shown. Since the expansion-valve

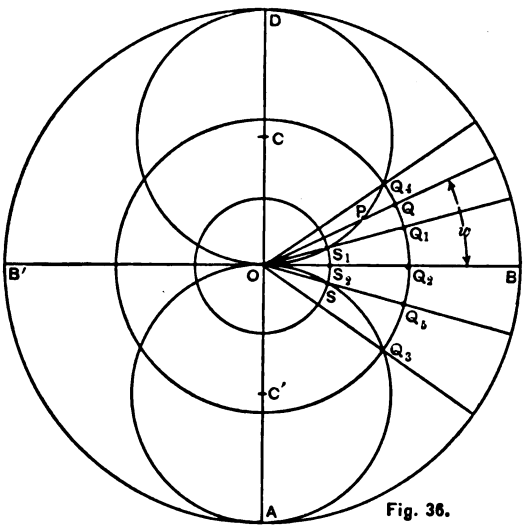

Fig. 36.

in this position of the eccentric has no lap or lead, and hence no angular advance, *OD* will represent the *total width of port-opening* in the expansion-valve seat. The expansion-valve is in the position shown in Fig. 34. As the crank moves through the angle ω, the centre of the expansion-valve moves through a distance $OP = \xi_0$. By reference to the end of § 21 it will be seen that the crank position, when the expansion-valve is in mid-position, is determined by drawing a tangent to its valve-circle (i.e., 90° from its line of eccentricity). Describe the circumference Q, Q_1, Q_2, etc., with a radius $a_0 + e_0$. Then since $OP = \xi_0$,

$$QP = OQ - OP = a_0 + e_0 - \xi_0 = a_1;$$

so that we have at once the width of opening of the expansion-valve port a_1 for the new crank position OQ.

When the crank is at OQ_4, $\xi_0 = OQ_4 = a_0 + e_0$, so that $a_1 = 0$, and the expansion-valve port is closed. As the crank moved from OQ_3 to OQ_4, the expansion-ports were open, and steam was given to the distributing-valve chest.

Digitized by Google

Describe the circumference SS_2S_1 with a radius e_0; then

$$S_2Q_2 = OQ_2 - OS_2 = a_0 + e_0 - e_0 = a_0,$$

and the *expansion-valve port is wide open* between crank positions OQ_3 and OQ_1. We now see the necessity for having the opening greater in the expansion-valve than in its seat. The effect is to admit steam earlier and cut it off later for the same travel of the valve.

Fig. 37 is to illustrate the effect of giving angular advance to the expansion-valve's eccentric. The distributing-valve's eccentric always makes an angle of $90° + \delta$ with the crank, while the eccentric for the expansion-valve makes an angle of $90° - \delta_0$, i.e., the expansion eccentric has a *negative* angular advance equal to δ_0. This negative advance is given to delay

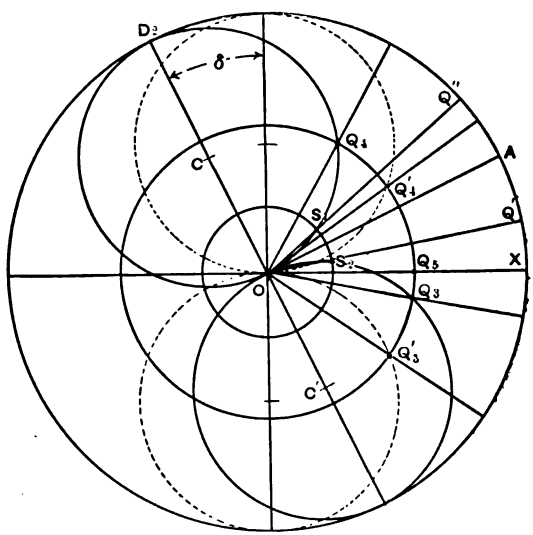

Fig. 37.

the opening and closing of the expansion-valve's ports; whereas the positive angular advance given to the distributing-valve's eccentric is for hastening the opening and closing of the distributing-ports. In the figure the expansion-valve admits steam to the distributing-valve chest between the crank positions OQ_3 and OQ_4. From OQ' to OQ'' the expansion-ports

Digitized by Google

are uncovered. The expansion-valve is in mid-position when the crank is at OA, or tangent to the valve-circle. Had the expansion-valve's advance been $\delta_0 = 0$, the valve-circle would have assumed the dotted position, and the admission and cut-off for the expansion-valve would have been earlier.

We have assumed in the foregoing that the distance between the expansion-valve's ports is sufficient for the travel of the valve. Had that distance been less than the half-travel of the valve the expansion-ports would again have opened for admission before the distributing-valve could have closed its ports. This is illustrated in the backing diagram of Example 4 of § 25. (Fig. 41.)

From Fig. 36 it is evident that the effect of reducing the travel of the valve is to admit steam earlier and cut it off later, so that the expansion-ports remain open, and the engine is controlled by the distributing-valve. This occurs when the half-travel is $a_0 + e_0$. Hence the earliest point of cut-off with the expansion-valve is when the stroke is greatest, and the longest stroke depends upon the distance between the expansion-valve ports, and the shortest stroke depends upon the width of the ports. Also, if the expansion-valve is in use, its half-travel is always greater than $a_0 + e_0$. The point of cut-off is, therefore, dependent upon the travel of the valve, and a change in this makes a variable cut-off of the gridiron-valve.

The mechanism employed for operating the expansion-valve is shown in Fig. 38. E is the expansion eccentric keyed at a fixed angular advance to the shaft C. Motion is communicated to the rock-shaft GHL by means of the eccentric-rod F. A is the link-block at the end of the valve-rod B. It is evident that the revolution of the shaft does not impart motion to the lower point of the slot L, and that the upper point of the slot has a motion proportional to twice the throw of the eccentric. When the link-block is at the lower end of the link the expansion-valve has no motion, and the engine is controlled by the distributing-valve. The motion of the valve for a position of the link-block intermediate between the top and bottom of the link-slot is variable. When the block is at the upper end the

Digitized by Google

valve has its maximum travel. The link is graduated by trial, and the block may be set at any desired point, by the mechan-

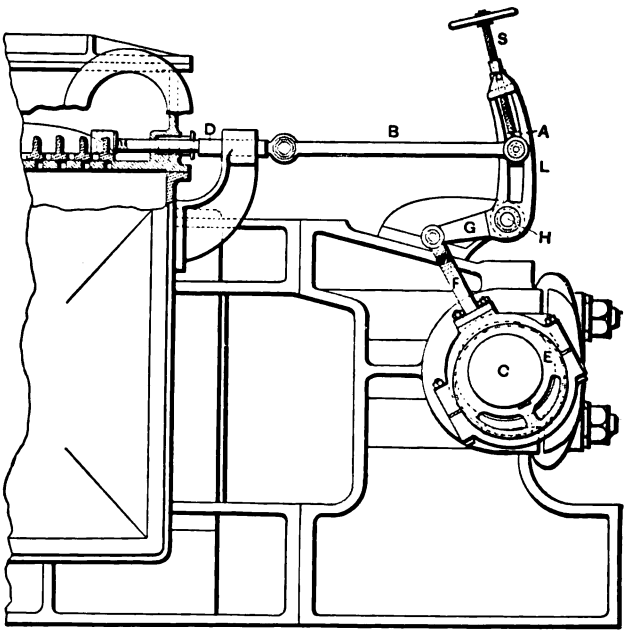

Fig. 38.

ism *S*, so that the expansion-valve is readily adjusted even while the engine is running.*

25. Problems on the Gozenbach or Gridiron Valve.—EXAMPLE 1. Find the limits of cut-off by the expansion-valve when the width of each expansion-port is 1.5 inches; width between expansion-blocks 2 inches (i.e., the width of port-opening in the expansion-valve casting); the expansion-valve's eccentric is 90° from the crank, with a throw of 3 inches; and the distributing-valve cuts off at two-thirds stroke. Neglect angularity of rods.

In Fig. 39 describe the circle *JKQT* with a radius equal to $a_0 + e_0$, or $\left(1.5 + \frac{2 - 1.5}{2} = \right)$ $1\frac{3}{4}$ in. to any convenient scale.

* The illustration is from Sennett's *Marine Engineering*.

Digitized by Google

When the crank is at OA the expansion eccentric is at OC. Draw a valve circle on OC as a diameter; then the earliest point of cut-off is when the half-travel is greatest (or equal to OC, or 3 in.), and it occurs at OQR at $\frac{1}{12}$ stroke. The valve remains closed till after the distributing-valve closes, or till after OD. If we decrease the travel of the valve we will cause the point of cut-off to be later. When the travel is $a_0 + e_0$, the expansion-valve circle would have that for its diameter, and it will cut off and immediately admit steam again for the crank position OC. Bisect JO in V, and erect a perpendicular cutting OC in X. Then X is the centre of an expansion-valve circle of radius $OX = XJ$, which will fix the latest point of cut-off for the expansion-valve. This gives the crank position OKL, or one-third stroke. Hence the limits are from $\frac{1}{12}$ to $\frac{1}{8}$ stroke. We observe that the expansion-valve closes its ports at OL and opens again at OD at the instant the distributing-valve cuts off steam.

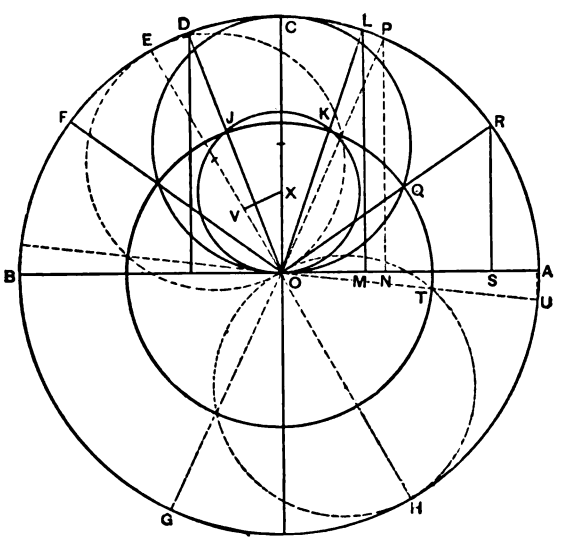

Fig. 39.

EXAMPLE 2. What will be the effect of setting the expansion-valve, in Example 1, 60° instead of 90° ahead of the crank?

Digitized by Google

Will the engine run equally well forward and backward? Fig. 39.

Lay off *BOE* equal to 60°, and describe the dotted circumferences. When the engine is going ahead the earliest point of cut-off by the expansion-valve is for crank position *OP*, or at 0.28 stroke. The latest point is at two-thirds stroke when the main or distribution valve cuts off steam. When the engine is backing, the expansion-valve admits steam to the distributing-chest at crank position *OP*, and cuts it off at crank position *OU*, or almost at the commencement of the stroke. Hence we cannot run the engine as well backing as in going ahead, with this setting.

EXAMPLE 3. The expansion-valve opens when the crank has passed 15° beyond the dead-point, and cuts off at half-stroke. Set the expansion-valve's eccentric so that the valve will open

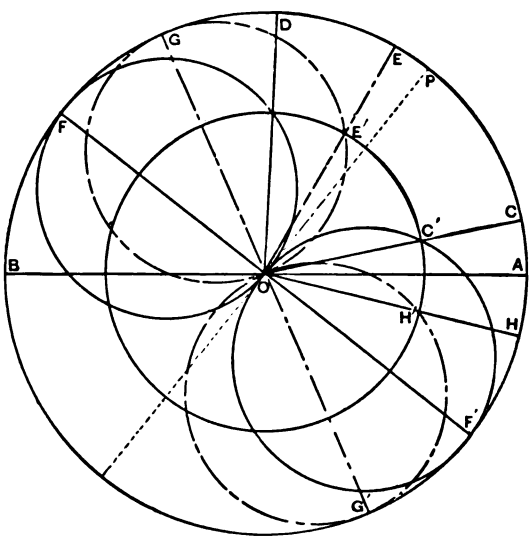

Fig. 40.

15° ahead of the dead-point. Find the point of cut-off by the expansion valve, and the angle between its eccentric and the crank. (Fig. 40.)

OC is 15° from *OA*. When the crank is at *OC* steam is ad-

Digitized by Google

mitted by the expansion-valve, and cut off when the position *OD* is reached. Hence, when the crank was midway between *OC* and *OD*, or at *OP*, the expansion-valve ports were wide open. Therefore draw the expansion-valve circle *OF* on a diameter perpendicular to *OP*. Sweep in the circumference *H'C'E'*; its radius will be $a_0 + c_0$. Since *COD* is (90 − 15 =) 75°, *DOP* is 37° 30′ and equal to *BOF*, the angle between the crank and the expansion-valve's eccentric. When *OC* is moved back through (15 + 15 =) 30° to *OH*, *OF* is moved to *OG*, and the *full-line* circles now become the *dotted* valve-circles. In the second case the angle between the crank and eccentric is (37° 30′ + 30° =) 67° 30′, and the expansion-valve cuts off at crank position *OE*.

EXAMPLE 4. Given the dimensions in the sketch at the top of Fig. 41; that the angle between the expansion eccentric and

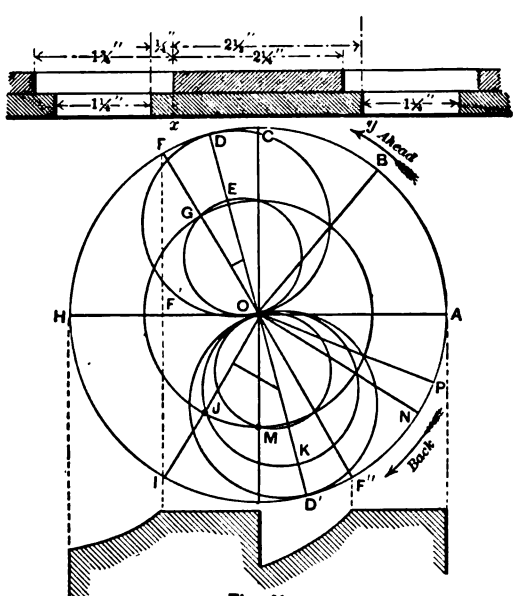

Fig. 41.

the crank is 75°; that the distributing-valve closes its port at three fourths stroke; find the throw of the expansion eccentric,

Digitized by Google

and the least and greatest travel of the expansion-valve in going ahead and backing.

Lay off $HOD = 75°$, and draw the expansion-valve circle OD. This must equal the maximum half-travel of the valve, or 2.5 inches, as seen in the given sketch. Draw the circumference $GEMJ$ with a radius $a_0 + e_0 = 1.5$ in. Then, going ahead, the earliest position of crank for cutting off steam is OB, and for backing, OP. OF is the crank position when the distributing-valve closes its port. With centre on OD and circumference passing through O and G, draw the circle OE. Then OC is the latest cut-off limit for going ahead. Similarly, ON is the latest limit while backing. The lower part of Fig. 41 is the top of an indicator-diagram when the engine is backing with the same travel, $2 \times \overline{OE}$, that is allowable while going ahead.

The throw of the expansion-valve's eccentric is equal to xy in the top figure, or $OD = 2.5$ in. The least travel of valve going ahead is $2 \times \overline{OE} = 3$ in., and in backing, $2 \times \overline{OK} = 4$ in. The maximum travel of the valve is $2 \times \overline{OD} = 5$ in. The least length of the expansion-valve chest in the clear is

$1\frac{1}{4} + 1\frac{1}{4} + 2\frac{3}{4} + 2 \times 5 +$ an amount for clearance at the ends.

26. The Meyer Valve.—This valve consists of a main or distributing valve, and an auxiliary or cut-off valve sliding on its back. The valves are controlled by separate, fixed eccentrics of, usually, equal throw. The angular advance of the cut-off eccentric is nearly 90°. The cut-off valve consists of blocks separated at a distance which can be varied at pleasure. The blocks may be moved relatively to each other so as to throw the cut-off valve out of use, or they may be made to cover the main valve-ports so as to prevent steam being admitted to the cylinder. The distance the blocks are apart is controlled by a right- and left-handed screw-spindle passing through them.

In Fig. 42 draw the crank orbit and main valve-circles as in § 22. Lay off δ_0, the angular advance for the cut-off valve's eccentric, and draw the cut-off valve-circles with a diameter equal to the throw. Denote the radius vector of the main

Digitized by Google

valve-circle by ξ, and by ξ_0 the radius vector of the cut-off valve-circle. Then for a crank position OB, $\xi = OL_2$ and $\xi_0 = OB$.

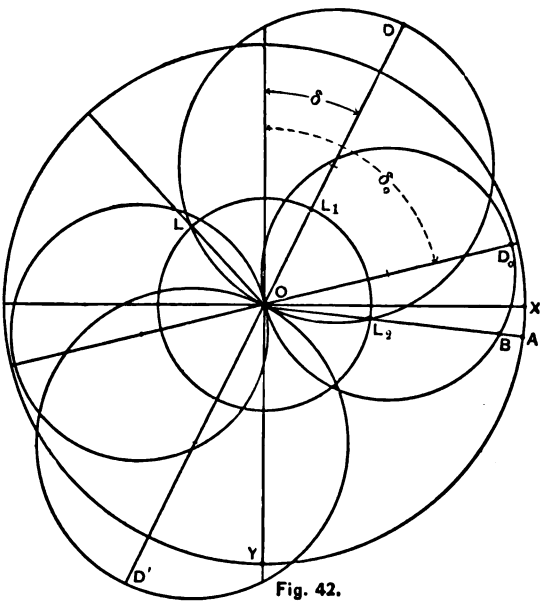

Fig. 42.

In Fig. 43, *A* and *B* are sketches of the two valves in mid-position (the eccentrics being disconnected so that the valves may simultaneously have that position).

Let L = the distance from the outer edge of the port F to the centre of the main valve = a constant ;

x = one half of the distance between cut-off blocks which varies with any change in the ratio of expansion ;

l = length of a cut-off block ;

a_0 = width of a port in the main valve ;

a = width of a port in the main valve's seat ;

y = the distance between the outer edge of the main port F, and the nearest edge of a cut-off block when the valves are as in Fig. 43, *B*, or *FE*.

Then, $y = L - l - x$. The distance y changes only with x. The

Digitized by Google

ratio of expansion varies directly with any change in the value of x. The distance x is never zero.

Fig. 43, *C*, represents the valves when coupled to their eccentrics. The main valve has moved through a distance ξ, the cut-off valve through ξ_0, while the distance between the centres of the two valves is

$$\xi - \xi_0 = \xi_x.$$

We see also from the figure that the new value of EF, or a_1, is equal to $y - (\xi - \xi_0)$. It is more convenient to measure $\xi - \xi_0$ directly from the drawing than to compute its value by use of the formulæ.

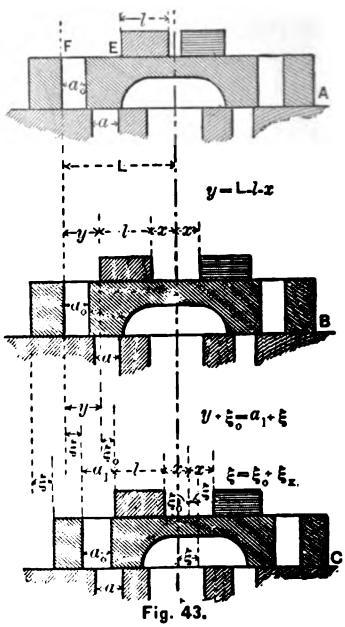

Fig. 43.

Fig. 44 is another method of expressing the relations of the parts in Fig. 43, *C*. With an angular advance, δ_0, draw OD_0 and the expansion-valve circle. Similarly, draw the main valve-circle OD. The crank is represented as moved through an angie ω to OP, then

$$\xi = OP, \quad \xi_0 = OQ, \quad \xi_x = \xi - \xi_0 = PQ,$$

and we have

$$a_1 = y - PQ.$$

In order to show how a_1 can be measured from the diagram, lay off from O, on the lines representing the different crank positions, values of $\xi_x = \xi - \xi_0$ as found. We then have the points Z, Z_1, Z_2, D_x, Z_4. The distance OD_x is the maximum value of ξ_x, or the greatest distance the centres of the valves are apart. This value of OD_x is

$$\sqrt{\overline{OZ_2}^2 + \overline{OZ_4}^2}.$$

Digitized by Google

The point D_x may also be found by constructing the parallelogram OD_0DD_x, as shown by the dotted lines in the figure. The locus of Z is a circle. The value of ξ_x is now found by measuring the radius vector of the circle OD_x corresponding

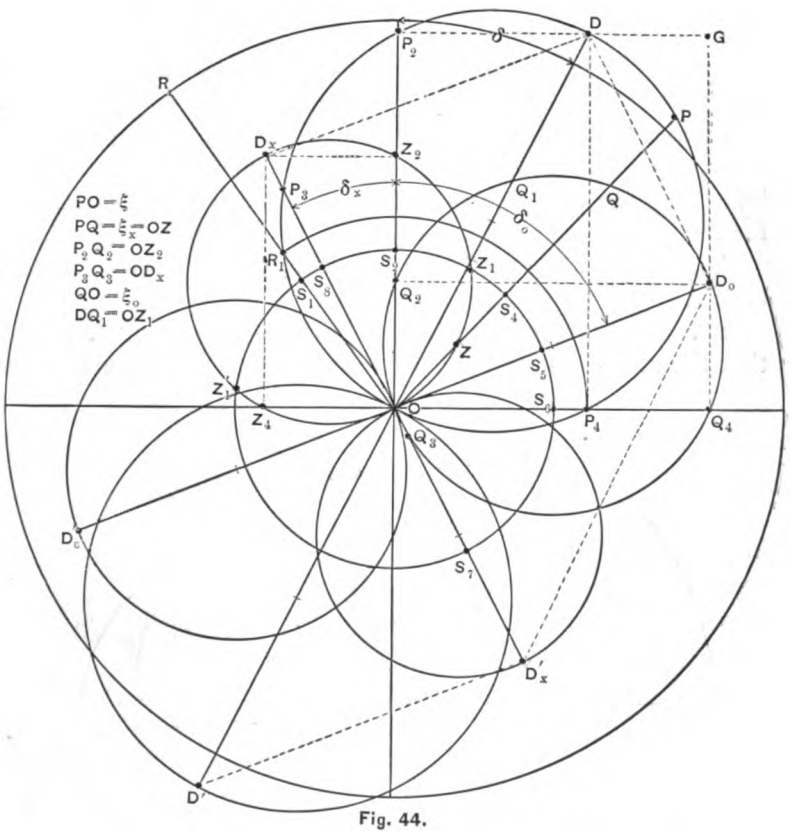

Fig. 44.

to any crank position. Draw the circumference $S_1S_2Z_1S_4S_6$, etc., with a radius L-l-x. Since $a_1 = L$-l-x-ξ_x, $a_1 =$ the vectorial intercept between the circumference of the circle L-l-x and the circle of diameter OD_x. At OZ_1, $a_1 = 0$, and the port in the main valve is closed, and so remains till the crank arrives at OZ_1'. The main valve closed at the crank position OR. If the value of L-l-x is less than OZ_1, the cut-

Digitized by Google

off by the auxiliary valve will be earlier. When $L\text{-}l\text{-}x = OD_x$, the engine will be entirely controlled by the main valve.

It is usual, in designing, to make OD_x coincide with the position of the crank when the main valve closes. Since the value of $L\text{-}l\text{-}x$ fixes the ratio of expansion, and since x is the only variable and is least when $L\text{-}l\text{-}x$ is greatest, the cut-off blocks are nearest each other when the ratio of expansion is least. The blocks must be long enough to prevent admission of steam from the inner edges (which is most likely to occur when x is greatest), and yet short, so as to decrease the length of the steam-chest. The length, l, is always designed for the earliest point of cut-off.

The construction of the Meyer valve is given in Chapter IV.

27. Examples on the Meyer Valve.—EXAMPLE 1. Given that the main valve cuts off at three-fourths stroke, and has a

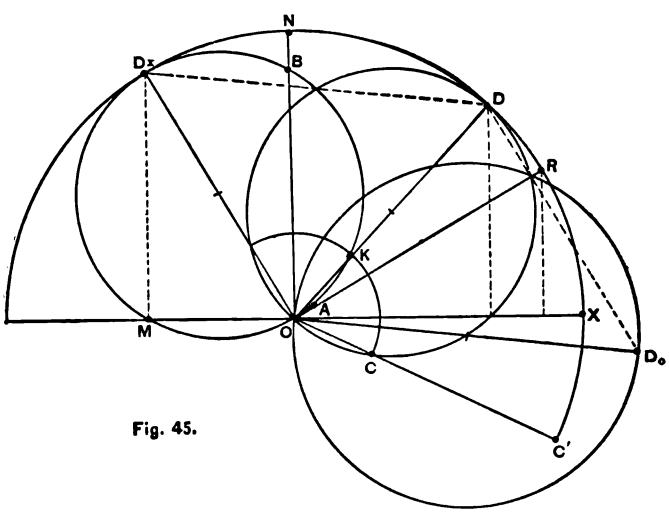

Fig. 45.

lead angle of 15°, and a travel of 6 in.; that the greatest distance between the centres of the valves is 3 in.; and that the width of port, a_0, in main valve is $1\frac{3}{8}$ in.; find length of cut-off blocks, the distance between the outer edges ($2L$) of the ports in the main valve, the throw and position of the cut-

Digitized by Google

off eccentric, and the distance the cut-off blocks are apart when cutting off at $\frac{1}{8}$ and $\frac{1}{2}$ stroke. Neglect angularity of all rods.

In Fig. 45, OC' and OD_x being positions for the crank when the main valve admits and cuts off steam from the cylinder, OD is found, and the main valve-circle drawn as in § 22. OD is the half-travel of the main valve, or 3 in. OK, the steam-lap, as measured, is $1\frac{1}{8}$ in. KD, the width of port opening in the main valve, as measured, is $1\frac{7}{8}$ in.

The maximum distance between the centres of the valves being given as 3 in., the length OD_x is determined. OD_x is generally assumed to be coincident with the crank when the main valve closes, therefore the point D_x is located. Describe the circle OD_x. Complete the parallelogram OD_xDD_0. OD_0 is measured to be $3\frac{5}{16}$ in., i.e., the throw of the cut-off eccentric. The angular advance for this eccentric is BOD_0, or greater than 90°. The angular advance for the main eccentric is BOD.

$OD_x = L\text{-}l = 3$ (on the assumption that $x = 0$ when the cut-off valve is thrown out of use). For the earliest point of cut-off, $\frac{1}{8}$ stroke, the crank position is OR, and

$$L\text{-}l\text{-}x = 3 - \overline{AR} = 3 - 2\tfrac{7}{16} = \tfrac{9}{16} = OA;$$

therefore $x = 2\frac{7}{16}$ in.;

$$l = a_0 + x = 1\tfrac{7}{8} + 2\tfrac{7}{16} = 4\tfrac{5}{16} \text{ in.};$$

$$L = 3 + l = 7\tfrac{5}{16}; \quad 2L = 14\tfrac{5}{8} \text{ in.}$$

For cutting off at $\frac{1}{8}$ stroke, the distance between the blocks is $2x$, or $2\overline{AR}$, or $4\frac{7}{8}$ in.; and for $\frac{1}{2}$ stroke the distance is

$$2 \times \overline{BN} = \tfrac{3}{4} \text{ in.}$$

EXAMPLE 2. Given a direct-acting engine of 3 ft. stroke; length of connecting-rod is 6 ft.; travel of main and cut-off valves is $4\frac{1}{2}$ in.; angular advance for the main eccentric is 30°, and for the cut-off eccentric 90°; distance between the outer edges of the ports in the main valve, $2L$, is 17 in.; width of

Digitized by Google

port opening in the main valve, a_0, is 2 in.; length of cut-off block, l, is $5\frac{3}{8}$ in. Find the earliest point of cut-off with this valve; the number of threads per inch for the inboard screw when the outer has 4, so that steam will be cut off exactly at $\frac{1}{2}$ and $\frac{1}{4}$ strokes.

In Fig. 46 draw the main and cut-off valve-circles as in Example 1. Complete the parallelogram, and draw the circle OD_x. The positions of the crank for $\frac{1}{2}$ stroke are OC and Og,

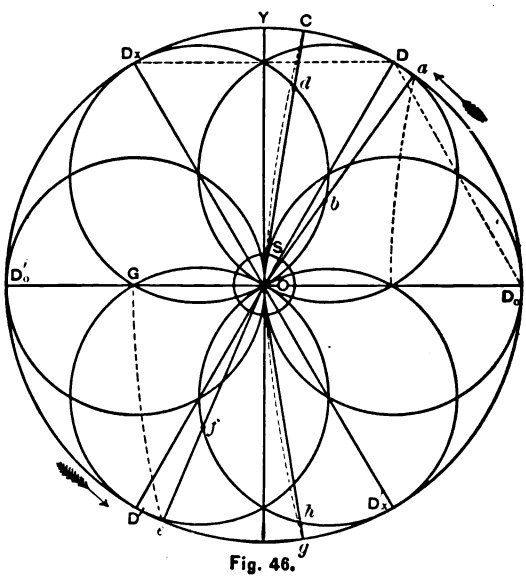

Fig. 46.

and for $\frac{1}{4}$ stroke, Oa and Oe. If the block of the cut-off valve, which regulates the admission of steam for crank positions Oa and Oc, be moved along its stem, while the crank sweeps through aOC, it will move through the distance

$$ab - Cd = \tfrac{2}{1}\tfrac{3}{6} - \tfrac{9}{1}\tfrac{}{6} = \tfrac{7}{8} \text{ in.},$$

on the scale that OD is $2\frac{1}{4}$ in. (the half-travel of the valve). Similarly, the other block, while the crank sweeps through eOg, will be moved along the stem a distance

$$cf - gh = \tfrac{1}{1}\tfrac{3}{6} - \tfrac{2}{1}\tfrac{}{6} = \tfrac{1}{1}\tfrac{1}{6} \text{ in.}$$

Digitized by Google

Since the blocks travel along the valve-spindle as it is turned, and through unequal distances in changing the valve from cutting off at $\frac{1}{4}$ to cutting off at $\frac{1}{2}$ stroke, the following proportion will hold:

$$\tfrac{7}{8} : \tfrac{11}{16} :: 4 : z,$$

where 4 = number of threads to the inch in the outboard block, and

$$z = 5\tfrac{1}{11},$$

the number of threads to the inch in the inner block.

From the data given $L\text{-}l = 11/2 - 5\frac{8}{8} = 3\frac{1}{8}$ in., while OD_x is measured to be $2\frac{1}{4}$ in. The difference $(3\frac{1}{8} - 2\frac{1}{4} =)\frac{7}{8}$ in. is one half of the shortest distance between the blocks. The greatest allowable distance between them is

$$2x = 2(l - a_0) = 2(5\tfrac{8}{8} - 2) = 6\tfrac{8}{4} \text{ in.}$$

In the figure, $D_0G = \frac{1}{2}(6\frac{8}{4}) = 3\frac{8}{8}$ in.; therefore the earliest point of cut-off is at the commencement of the stroke.

28. On the Adjustment of the Main and Gridiron Valves of the U. S. S. Despatch.—The following adjustments were made by P. A. Engineer Asa M. Mattice, U. S. Navy, assisted by the author, and are abstracted from the cruise record of 1880.

The *Despatch* had a pair of vertical, inverted, direct- and double-acting, condensing engines, with a common three-ported slide and a gridiron cut-off valve. There was a light balance-wheel and a screw-propeller. The indicator-diagrams showed an absence of lead for either cylinder.

The angular advance of each eccentric was determined by first putting the crank and eccentric on corresponding centres, and then measuring the angle, as marked by the "tell-tale" on the balance. To do this, a mark was made on the cross-head brasses and the guide, and the reading of the tell-tale noted; after which the engine was jacked till the marks on the cross-head and guide again coincided, when the tell-tale on the balance was noted. The marks on the balance were equally distant from the mark to be found, corresponding to the position at dead

Digitized by Google

centre. The arc on the balance was bisected, and the engine jacked till the middle point was opposite the tell-tale, when the engine was on its centre.

The eccentric was placed on its dead-point in the same way, and the arc on the balance between the dead-points for the engine and eccentric was measured and compared with the whole circumference, when the angular advance was determined.

A small lead was then given to the after engine, and an indicator-card taken. This gave a horizontal line *xy* in the compression curve of Fig. 47, indicating that for the portion of stroke *xy* the back pressure in the cylinder and the pressure of steam in the main-valve chest were equal. There was heard a thumping noise at the same time, caused by the main valve being unseated. The problem then was to find how far to advance the cut-off eccentric to admit steam to the main-valve chest before the cushion pressure was equal to that in the line *xy*.

Describe the circle *ACB*, Fig. 47, with a radius equal to the throw of the cut-off eccentric. Let this circumference also denote the crank-pin path. Draw the circumference *DGE* with a radius of $1\frac{3}{8}$ inches, the width of port in the cut-off, or expansion-valve seat. *AB* is the line of centres, and parallel to the valve face. Lay off the arc *BC* equal to the measured angle between the crank and cut-off eccentric. Draw the valve-circles *OC* and *OC'*. *OC* is the position of the crank when the cut-off valve has its greatest throw in one direction. *OG* is the position of the crank when the steam is cut off, and *OH* is the position when the cut-off valve admits steam to the main-valve chest, the cut-off link being in full gear.

We find from the indicator-card that when the valve is in short gear the main valve is unseated when the piston is a distance *xy* from the end of its stroke. *OM* is then the latest point at which it is allowable for the cut-off valve to open. Hence it is necessary to advance the eccentric through the angle *HOM*.

Having arranged the cut-off mechanism so as to prevent the

Digitized by Google

lifting of the main valve, the engines will pass the centres smoothly when the main valve's reversing link is in short gear; but as this interferes with the full width of port-opening, it was

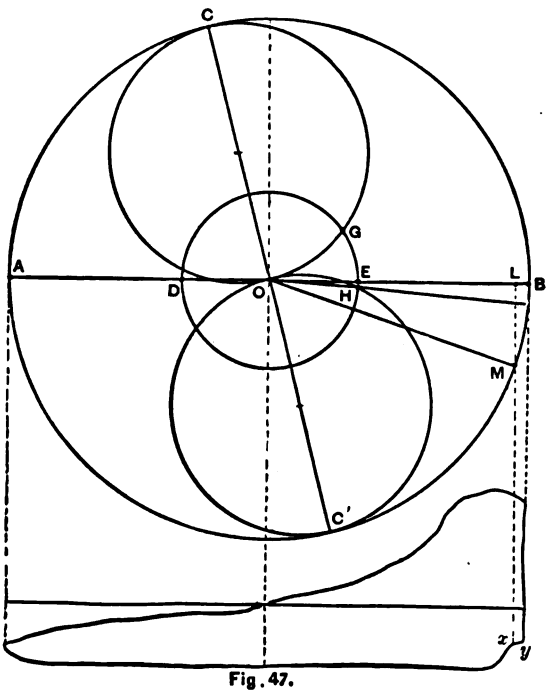

Fig. 47.

decided to rearrange the main valve to produce the desired results.

Taking an indicator-card with considerable cushion, we erect and measure two ordinates in the compression curve. They are found to be 3.45 and 9.7 lbs. respectively. We also measure the distance of each ordinate from the end of the card, and find these distances to be 4.5 and 0.625 in. respectively. Then, to find the extra length of stroke equivalent to the clearance volume, we have

$$(c + 4.5) : (c + 0.625) :: 9.7 : 3.45.$$

Whence

$$\text{clearance} = 1.5 \text{ in.}$$

Digitized by Google

The absolute back pressure was found from several cards to have a mean value of 4 lbs. It was decided best to arrange the valve to compress this steam to 20 lbs. absolute. In order to effect this, the exhaust must be closed 6 in. from the end of the stroke, which is shown as follows:

$$4 : 20 :: 1.5 : y;$$

$$y = 7.5;$$

$$7.5 - 1.5 = 6 \text{ ins.}$$

To find the dimensions of the valve to do this, we construct the diagram, Fig. 48.

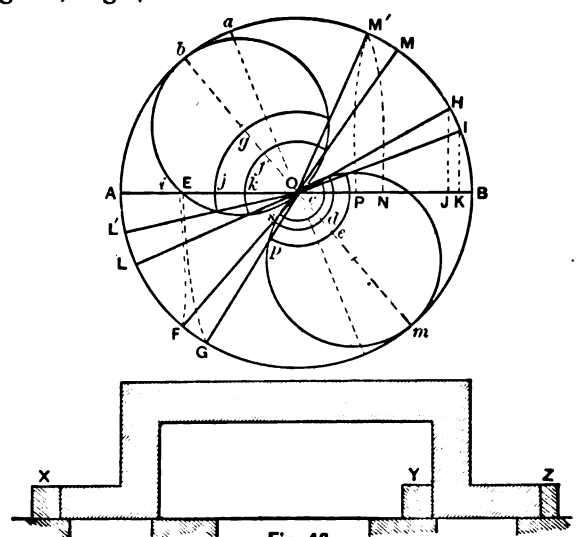

Fig. 48.

Laying off $AE = 6$ in. (stroke is 33 in.), and sweeping out to the crank orbit with a radius equal to the length of the connecting-rod, we find that the exhaust must close at OF on the up stroke and at OG on the down stroke. Laying off $BOa =$ measured angle between the crank and main-valve eccentric, we find that, if no change is made in the angular advance, the exhaust will now open at OH and IO on the up and down strokes respectively; but this will be too late. It was decided

Digitized by Google

to open the exhaust $1\frac{3}{4}$ in. from the end of the up stroke. Laying off $BK = 1\frac{3}{4}$ in., we find that the exhaust will open for crank position *OI*. Bisecting the angle *IOG*, we get *Ob* for the new position of the eccentric. We also find that the exhaust will open at *J* on the down stroke, or a very little earlier than on the up stroke. Constructing the circle *Om*, we find that *Op* is the necessary lower exhaust-lap, and *Os* the upper.

Now to examine the steam side of the valve. Draw the lap-circle *Of* equal to the measured lap of the valve. We find that having increased the angular advance without changing the steam-lap will cause the steam to be admitted at *OL* and cut off at *OM*. This lead was considered too great, and it was decided to have the port open $\frac{1}{2}$ in. when the engine is on its centre. The distance *ij* was laid off equal to $\frac{1}{2}$ in., and the new steam-lap is *Og*. This gives admission at *OL'*, which is about right. The greatest port-opening is now $bg = 1\frac{5}{8}$ in.,—nearly three fourths of the former opening. This was considered sufficient, as the indicator-cards had shown no "wire-drawing" of steam. The steam will now be cut off at *OM'*, or at *N* and *P* on the down and up strokes respectively. Since the engines are coupled at right angles, and this point of cut-off is considerably beyond half-stroke, the engines can be started with ease.

The amount of steam-lap to be added to the valve is now $fg = \frac{5}{8}$ in. Similarly, $cd = \frac{1}{8}$ in. is the exhaust-lap to be added. In the same way we find that $ce = \frac{5}{8}$ in. must be added to the lower exhaust-lap. This gives the following to be added to the valve:

Upper steam-lap, $\frac{5}{8}$ in.; Lower steam-lap, $\frac{5}{8}$ in.
Upper exhaust-lap, $\frac{1}{8}$ in.; Lower exhaust-lap, $\frac{5}{8}$ in.

The original valve and ports are shown in the lower part of Fig. 48. We can obviate the necessity of putting on the $\frac{1}{8}$ in. additional exhaust-lap at the upper end by shifting the centre of the valve up $\frac{1}{8}$ in., and adding $\frac{1}{8}$ in. to the upper steam- and lower exhaust-lap, and subtracting $\frac{1}{8}$ in. from the lower steam-lap.

Digitized by Google

Then the additions will be—

To upper steam-lap, $\frac{5}{64}$ in.; To lower steam-lap, $\frac{1}{32}$ in.
To upper exhaust-lap, 0 in.; To lower exhaust-lap, $\frac{5}{64}$ in.

These additions are represented in *X*, *Y*, *Z*.

The indicator-diagram taken after these changes were made is shown in Fig. 49.

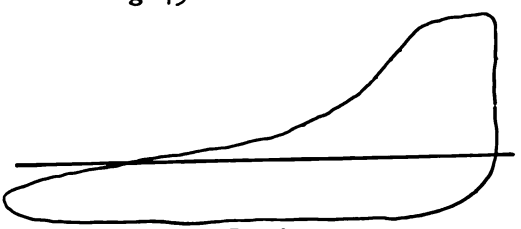

Fig. 49.

For further data regarding these engines, see *Jour. Frank. Inst.* for Jan. 1882.

Digitized by Google

CHAPTER III.

VALVE AND REVERSING GEARS.

29. The Shifting or Stephenson Link was originally intended for reversing only, but it is used advantageously as a cut-off mechanism within certain limits. There are two eccentrics keyed to the shaft. One eccentric is for ahead-gear and the other for backing. The lower eccentric in Fig. 50 at *A* is for going ahead. There are two rods as shown, and a link. The end of the valve-stem is jointed to the link-block, which either slides in a slotted link or embraces a bar link. The link always slides over the block (see § 41). If the link is solid, the eccentric-rods are attached to the ends; but if it is slotted, the rods are attached to the shaft side of the link, near the ends of the slot.

When the link-block is in one end of the slot the valve partakes of the motion of the eccentric attached to that end of the link. When the block is not at the end of the slot the valve partakes of the combined motions of the two eccentrics. If the block is at the mid-gear position, the valve does not admit steam to the cylinder, and the engine is at rest.

The travel of the valve, when the link is in full gear, is twice the throw of the eccentric. If we neglect the angularity of the eccentric-rods, the valve travels, when the link is in mid-gear, a distance equal to

$$2\,(lap + lead)$$

of the valve. It is impossible, however, to neglect the effects of angularity.

When the piston is at the outer end of the cylinder, and the eccentrics are pointing away from the cylinder, and the

Digitized by Google

eccentric-rods crossed, as at *A* in Fig. 50; or when the piston is at the inner end, with the eccentric-rods pointing towards the cylinder, and the eccentric-rods open, as at *B* in Fig. 50,—the

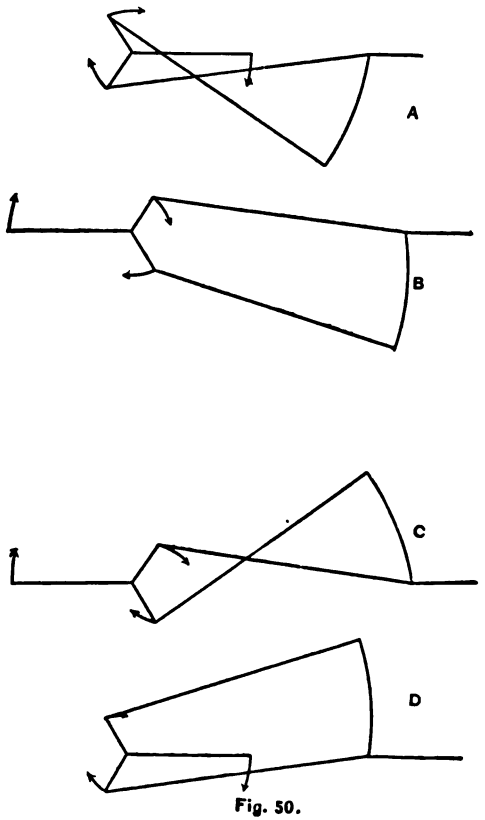

Fig. 50.

centre of the link, or the valve in mid-gear, travels a distance equal to

$$2\,(lap + lead) + amount\ due\ to\ angularity\ of\ rods.$$

By angularity of the eccentric-rods is meant the distance the centre of the link, or the valve, would move by disconnecting it from the rods and then connecting it to the rods reversed i.e., the distance the centre of the link moves when the rods are changed from the positions *A* to *D*.

Digitized by Google

Fig. 50, at *A* and *B*, shows the correct manner of connecting the eccentric-rods to the link when there is no independent cut-off valve, and when the link is to be used for varying the ratio of expansion by having the link-block occupy different positions in the slot. When the rods are thus connected and the mechanism is used for variable expansion the lead is increased as the value of the ratio of expansion is increased. When the mechanism is connected up, as in Fig. 50, *A* and *B*, the lead is greater near mid than at full gear, the port is opened and closed earlier, and opened wider than when the rods are arranged as in Fig. 50, *C* and *D*. With the rods connected as in *C* and *D*, the travel of the valve for mid-gear is

$$2\,(lap + lead) - amount\ due\ to\ angularity\ of\ rods.$$

The difference between the travel of the valve in mid-gear in the first and second cases is

twice the amount due to the angularity of the eccentric-rods;

so that by having the link-block in some position of the link other than at full gear the travel of the valve will be greater for the rods coupled as in Fig. 50, *A*, than as in *D*. Hence when the link is the only cut-off mechanism the rods should be coupled as in Fig. 50, *A*. If the link is to be used only in full gear, or if an independent cut-off mechanism is used, couple the rods as in Fig. 50, *D*. In this latter case the link may be straight.

The object in curving a link-slot is to equalize the lead of the valve for all travels. To accomplish this, it is necessary to have the radius of curvature of the slot such as will make the increase or decrease of the lead the same for both strokes of the piston.

The radius of curvature is, approximately, a trifle less than the length of the eccentric-rod, or about twice the (lap + lead) less than the distance from the centre of the eccentric to the centre of the link-block.

To illustrate an exact method for finding the radius of curvature, as explained in § 30, let the throw of the eccentric be 2 in., and the distance between the centres of the link-block

Digitized by Google

and the eccentric 20 in. Draw the lines from the centre of the eccentric to the centre of the link-block when the engine is on each centre and the link in full gear. Then the distance between the two centre positions of the link-block is (see Fig. 51)

$$2\ (lap + lead).$$

Draw lines parallel to the line joining the centre of the shaft to the centre of the link-block, and separated from it a distance equal to one half the length of the line joining the centres of the link-block in full gear, for the two dead-centre positions of the crank, or 6 in. The distance between the centres of extreme position of the link-block = 3 × travel of the valve = 3 × 4 = 12 in., as explained at the end of this section. With a radius equal to the length of the eccentric-rod, describe an arc cutting the two parallel lines just drawn: do this also when the engine has turned through 180°. Measure the distance between the intersections, which is found to be

$$2\ (lap + lead) + \textit{amount due to angularity of eccentric-rods.}$$

Lay off this distance, making the extreme points equidistant from the centre of the link-block when the valve is in full gear. Pass an arc of a circle through the three points thus located. The radius of the arc is the required radius of curvature. With such a link the increase or decrease of the lead is the same for each stroke of the piston, and equal to one half the motion of the valve due to angularity of the eccentric-rods. Hence, use long rods, keep the travel of the valve the same for both strokes of the piston, and remember that the alteration of lead will be least in going from full to mid gear when the eccentric-rods are arranged as in Fig. 50, *A*.

The methods of attaching the suspension-rods to the link vary. Some prefer long and others short suspension-rods (see § 41). Some have the link suspended from above and others from beneath. The object in every case should be to prevent the link from slipping over the block as the engine is running.

The locus of the centre of the suspension-bar pin is approximately a Cassinian resembling a flattened figure 8.

Digitized by Google

The suspension-bar is made in such a length and its fixed point is so located that the other end will vibrate in a line through the middle points of the figure ∞, and then the slip of the link is a minimum.

The link usually rests upon the block when going ahead. The slip of the link may be decreased by increasing the angular advance of the eccentric. When the angular advance is zero, the link is moved bodily as the engine turns.

The length of the link should never be less than three times the travel of the valve; for if less, it is difficult to reverse the engine when the piston is near the end of its stroke, as the link would make an obtuse angle with the valve-stem. When the length of the link is equal to the travel of the valve, the valve-stem and link are in the same line.

In § 23 it was shown that the Allen valve had all the exhaust features of the simple slide-valve, and that it was a great

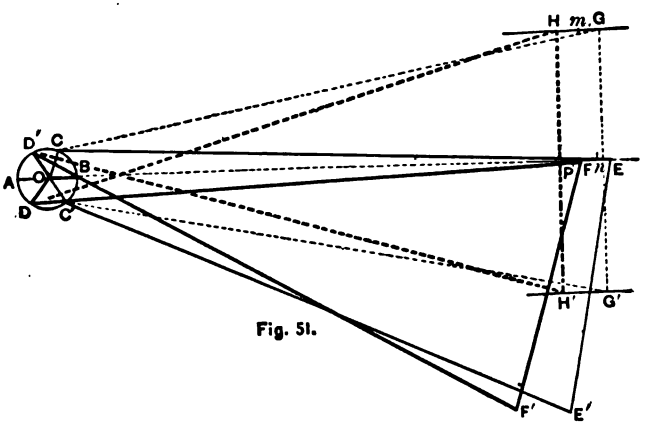

Fig. 51.

improvement upon it, in that the port opens sooner, remains open longer, and closes more quickly than with the simple slide-valve. What has been said with reference to the link-motion of the slide-valve gear holds for the Allen valve. It is to be noted that the Allen valve permits an earlier admission and cut-off than does the single slide.

30. Problems on the Stephenson Link (Fig. 51).—The throw of the main valve's eccentrics for the high-pressure

Digitized by Google

cylinder of the U. S. S. *Galena* is $3\frac{3}{16}$ in.; length of link-block along the slot, $7\frac{3}{4}$ in.; width of slot, $4\frac{1}{2}$ in.; distance from centre of link-block to centre of eccentric when in full gear, $56\frac{3}{8}$ in.; Meyer cut-off valve used: find radius of curvature of the link-slot.

In Fig. 51, OC = throw of eccentric = $3\frac{3}{16}$ in.: CE = length of eccentric rod = $56\frac{3}{8}$ in.; EE' = length of link slot = 27 in. The angles between the crank and eccentric being unknown, we will assume them to be 120°.

When the crank is at OA, the go-ahead eccentric is at OC, and the backing eccentric at OC'. As the crank moves to the position OB, the eccentrics move to OD and OD'. The gear is represented as being full and mid for both positions of the crank.

By § 29, $FE = 2\,(lap + lead)$;

$$HG = 2\,(lap + lead) + \left\{ \begin{array}{l} a\ certain\ amount\ due\ to\ angularity\ of \\ eccentric\text{-}rods. \end{array} \right.$$

Bisect HG and FE at m and n respectively. Lay off $nP = mH$, and through the points H, P, and H' pass an arc whose radius is the required radius of curvature.

Fig. 52 is a drawing of the Stephenson valve-gear as used for a locomotive on Penna. R. R. (see *Engineering*, xxxii. 602).

31. The Stationary or Gooch Link (Figs. 53 and 54) is turned away from the eccentrics.* The radius of the link is equal to that of the radius-rod HF. When the eccentrics are at OC and OD respectively, the crank is at OA; when at OD' and OC' the crank is at OB. The angular advance of the eccentrics is found by the method illustrated in § 22. CE and DF are the eccentric-rods. M is the fixed point of the suspension-rod. SOR and RN are rods used in shifting the link-block for reversing the engine.

Knowing the angular advance for the eccentrics, draw them as represented in Fig. 53.

From C, C', D, D', with a radius equal to the length of the eccentric-rod, sweep in arcs through E, $E'F$, F'. From O lay

* Fig. 54 is from Rose's *Modern Steam-Engines*.

Digitized by Google

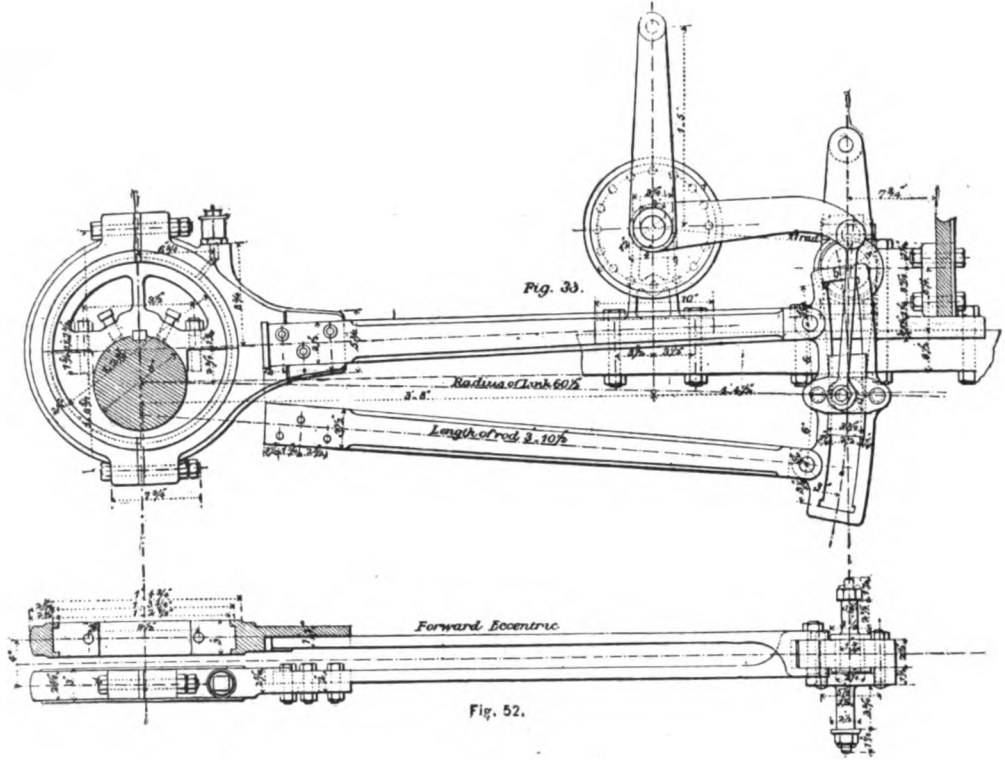

Fig. 52.

Digitized by Google

off OG equal to this radius, and at G, with a radius equal to the half-length of the link, describe arcs intersecting the arcs just drawn in the points E, E', F, F'. From E and E', with a radius equal to the length of the radius-rod, mark the points H, H' on the line of centres. Lay off HN on HE, sweep arc NJ with H as a centre. Erect a perpendicular to AH at J, and lay off

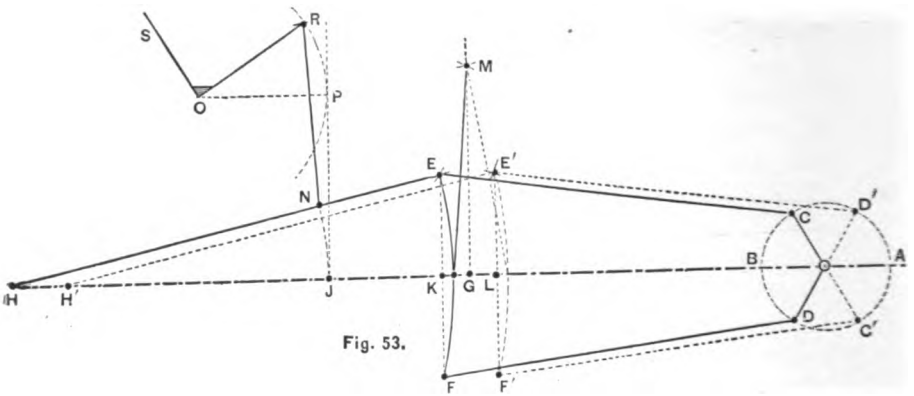

Fig. 53.

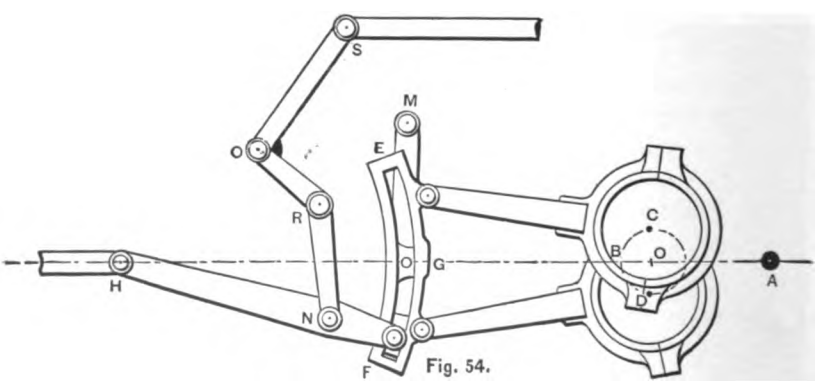

Fig. 54.

on it the length JP. To this line at P erect a perpendicular, and lay off PO. From N, with a radius equal to JP, find point R. Erect a perpendicular through G to AH: it will be the locus of the fixed point of the suspension-rod. Mark the point K where EF cuts AH, and from this point, with a radius equal to length of the suspension-rod, find the fixed point M of support.

Digitized by Google

This valve-gear gives a constant lead for all points of cut-off. It has the same lead when the valve is in full and mid gear.

By changing the angular advance of the backing eccentric and lengthening its eccentric-rod, or by lowering the link, or by making one port wider than the other, the valve may be made to cut off at the same part of the stroke from either end of the cylinder; but the valve-gear will not then work well in backing.

The link should always be vertical when the engine is on its centre; and any movement of the block from one part of the link to another should not change the position of the valve.

When the Gooch link is used on locomotives the steam-chest must be on the side (not top) of the cylinder.

32. The Allen Link combines the essential features of the Stephenson and Gooch links (Fig. 55). The link is straight. The reversing-gear is attached to both the link and radius-rod.

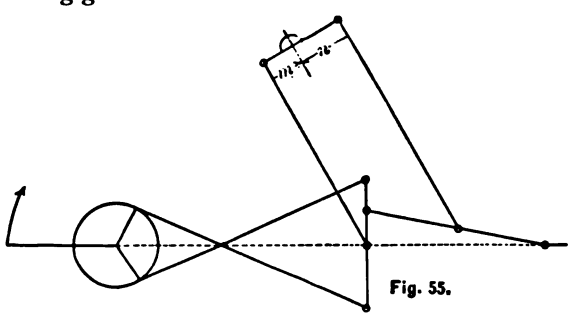

Fig. 55.

By having the distances *m* and *n* unequal, the movements about the reversing axis are unequal and opposite. Though bulky and complicated, this gear gives equal lead to the valve in all positions.

33. The Fink Link is simple, and has a constant lead; the throw of the eccentric is equal to the (lap + lead); the travel of the valve is modified by the bell-crank motion of the link; and the crank and eccentric are 180° apart. When used for reversing, the point of suspension is at the intersection of the line of centres, and a perpendicular to it through the centre

Digitized by Google

of the link-block when in full gear. The point of cut-off is varied by raising or lowering the link end of the radius-rod (Fig. 56).

The following application of a Fink link to a non-reversing engine will illustrate its properties:

Given (lap + lead) equal to 1 in., the greatest half-travel of the valve as 3 in., find the dimensions of the link.

Since the maximum travel of the valve is 6 in., while the

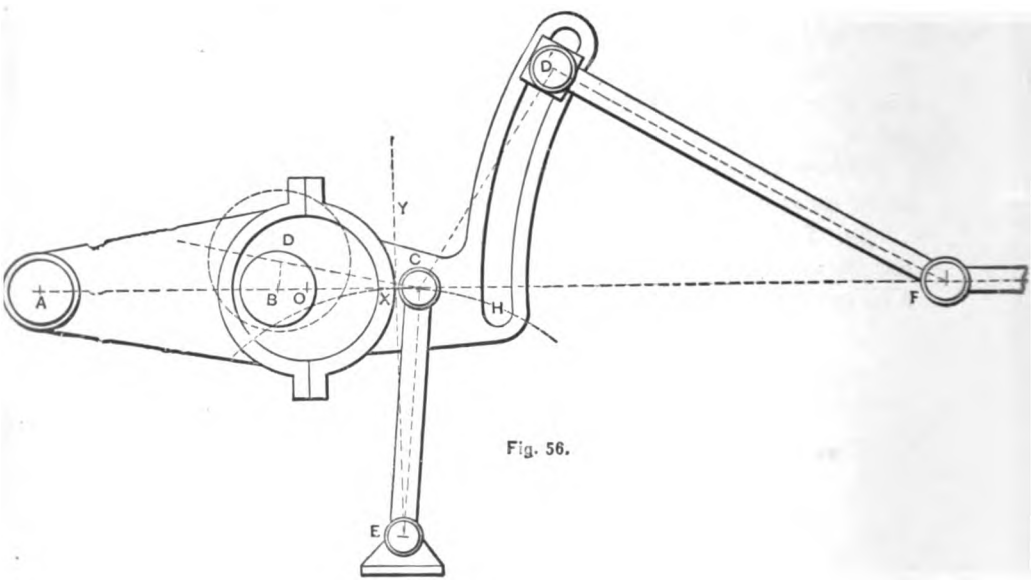

Fig. 56.

throw of the eccentric is but one inch, the increase is due to the bell-crank motion of the gear. Let $BO = 1$ in., the throw of the eccentric. When the centre of the eccentric moves from O to D the valve travels 3 in.; C comes on to the vertical EY at X. Its distance then from D is 1.8 in. OCD' is a bell-crank whose new position is DXD'. Hence

$$\frac{\text{Throw of eccentric}}{\text{Half-travel of valve}} = \frac{DX}{CD'}, = \frac{1}{3} = \frac{1.8}{CD'},$$

or $CD' = 5.4$ inches, which is the required length of the link.

Digitized by Google

34. Joy's Valve-gear (Figs. 57, 58, 59, and 60).—This gear, which is coming into use for all types of engines, dispenses with eccentric, rods, and link; has the advantage of giving equal lead, port-opening and cut-off; and of being cheap, and accessible for repairs. The following description is from the inventor's circular. Figs. 57, A, and 57, B, illustrate its appli-

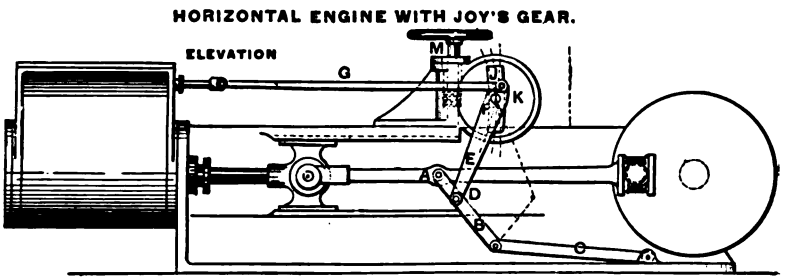

Fig. 57,A.

cation to stationary and marine engines.

"From a point *A* in the connecting-rod (preferably about the middle) motion is imparted to a vibrating-link *B*, constrained at its lower end to move vertically by the radius-rod *C*. From a point, *D*, on this vibrating-link horizontal motion is communicated to the lower end of a lever *E*, from the upper end of which lever the motion is transmitted to the valve-spindle by the link *G*. The centre or fulcrum *F* of the lever *E* partakes also of the vertical movement of the connecting-rod to an extent equal to the amount of its vibration at the point *A*. The centre *F* is for this purpose carried vertically in a slot *J*, which is curved to a radius equal to the length of the link *G*, connecting the lever *E* to the valve-spindle. The slot itself is formed in a disk *K*, which is concentric with the centre *F* of the lever *E* at the moment when that lever is in the position given by the piston being at either end of the cylinder. This disk is capable of being partially rotated on its centre, so as to incline the slot over to either side of the vertical, by means of the worm and hand-wheel *M*, thereby causing the curved path traversed by the centre *F* of the lever *E* to cross the vertical centre line and diverge from it on either side at will. The

Digitized by Google

forward or backward motion of the engine is governed by giving the slot this inclined position on one or other side of the vertical centre line, and the amount of expansion depends on the amount of the inclination, the exactly central or vertical position being *mid gear*. In that position steam is admitted at

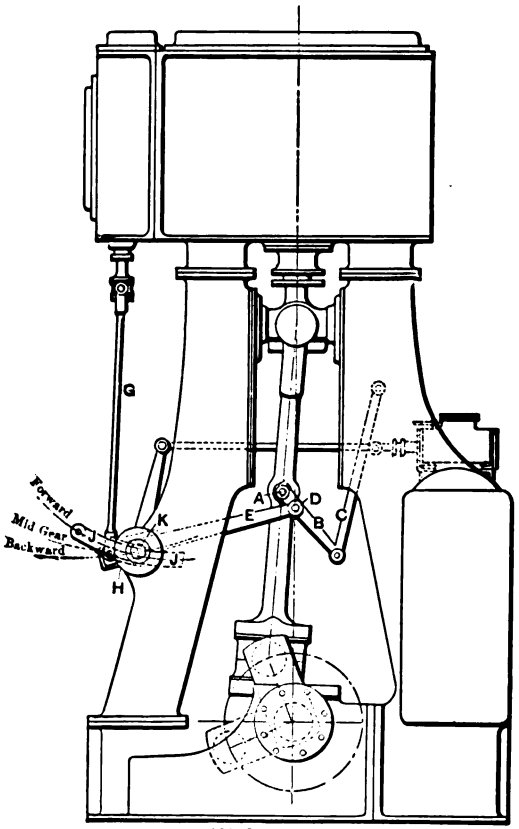

JOY'S VALVE GEAR
Fig. 57, B.

each end of the stroke to the amount only of the lead, and this is done exactly equally on each side of the centre line, the amount of lead being constant for forward and backward motion, and for all degrees of expansion. Thus, when the crank is set at the end of the stroke either way the centre *F* of

Digitized by Google

the valve-lever coincides with the centre of the slot, and therefore the slot may be moved over from forward to backward gear without affecting the valve at all.

"It will be seen at a glance that if the lower end *D* of the lever *E* were attached directly to the point *A* in the connecting-rod there would be imparted to the centre *F* of that lever an unequal vibration above and below the centre of the disk *K*. The extent of the inequality would be twice the versed sine of the arc described by the lower end *D* of the lever *E*, and this would give an unequal port and unequal cut-off for the two ends of the stroke. But this error is corrected by attaching the lower end *D* of the lever *E* to the vibrating-link *B*, for while the point *A* on the connecting-rod is performing a nearly true ellipse (Fig. 58), the point *D* in the vibrating-link *B* is moving in a figure like an ellipse bulged out at one side, and this irregularity is so set as to be equal in amount to the versed sine of the arc described by the lower end of the lever *E*, thus correcting the above error and giving an equal travel to the centre *F* of the lever above and below the centre of the slot. At the same time the error introduced by the movement of the end of the valve-link *G* is corrected by curving the slot *J* to a radius equal to the length of *G*. These two errors, however, may be set against each other, and a compromise may be made by attaching the end of the lever *E* direct to the connecting-rod at *A*, and allowing the centre *F* to slide in a straight slot. By a just balancing against each other of the errors so produced, and by making the centre *F* of the lever *E* and the centre of the disk *K* to coincide at varying points to the travel of the former, a fair motion may be got for the forward gear of an overhead marine engine, giving a longer cut-off for the up stroke than for the down stroke. This, of course, is at the sacrifice of the backward gear, in which the reverse is the case; and the various degrees of expansion are between the two extreme conditions. Referring again to the equalizing of the traverse of the centre *F* of the lever *E* in the slot *J*, the unequal traverse may be either under-corrected or over-corrected by shifting the point *D* in the vibrating-link *B* nearer to

Digitized by Google

or farther from *A*. By this means a later point of cut-off may be given to either end of the cylinder at will, and the engine may thus have more steam admitted to one side of the piston than to the other, if desired. The same thing may be done for the lead. By altering the position of the crank, for which the lever centre *F* coincides with the centre of the slot *J*, an increased or a diminished lead may be given. The central positions and exact corrections are, however, in all cases standard and equal."

The following rules are given for laying down the centre lines of *Joy's valve-gear for locomotives* (see Fig. 59):

"Take the centre line *aa* of the cylinder and that of the valve-spindle *bb* as they now are in ordinary American locomotives, the valve-spindle being kept in the same vertical plane as the centre line of the cylinder, or exactly above it. Draw the path of the crank-pin and the centre lines of the connecting-rod *ccc* for both upper and lower positions when the piston is at half-stroke.

JOY'S VALVE GEAR.

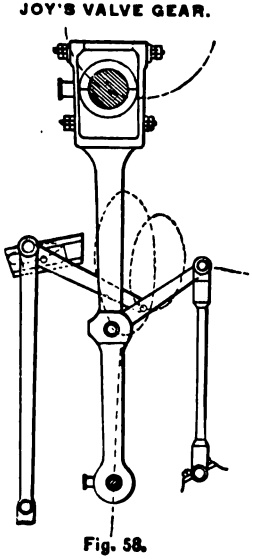

Fig. 58.

"Take a point *d* on the centre line of the connecting-rod, where its vibration between d_1 and d_2 is equal to about double the length of the full stroke of the valve. It is better to allow rather more than less. This distance in ordinarily proportioned locomotives will usually be about or a little under two fifths the length of the connecting-rod, measuring from the piston end.

"It may, however, be chosen very much to suit the other arrangements of the engine, such as the position of the slide-bar bracket, etc., getting, however, if possible, a vibration of the connecting-rod fully equal to double the stroke of the valve, to avoid too great an angle of the slide-link when put over for full forward or backward gear.

"Having chosen the point *d*, draw a vertical line *zz* through

Digitized by Google

it and mark off the two points *cc'* on each side, these being the extreme position of the same point on the connecting-rod for front and back stroke. From these points draw lines to a point *f* on the vertical (which will represent the centre lines of the first link pinned to the connecting-rod) so far down that the angle between them shall not be more than 90°. Less is better if there is room to permit it above the level of the rails.

"The point *f*, which will rise and fall with the vibration of the connecting-rod, is to be controlled as nearly as may be in the vertical line by a link pinned either forward near the cylinder at *f'*, or, if more convenient, it can be pinned backward.

"Next, on the valve-spindle centre line *bb* mark off on each side of the vertical *zz* the amount required for lap and lead together at *gg'*. Then, assuming the piston to be at the front of the cylinder, and the centres of the connecting-rod to be at *hh'* (*h'* being the crank-pin), the point *d*, from which we have chosen to take motion, will be at *e'*, and the link-pin to the connecting-rod for transmitting motion to the valve will be at *e'f*.

"From a point on this link, which has at first to be assumed, say at *j* (which will be about one fifth more than the half-vibration of the connecting-rod—that is, d_1 to d'), draw the centre line of the lever actuating the valve that is joining *j* and *g*. The point where this line crosses the vertical *zz* will be the centre or fulcrum of the lever, and will also be the centre of oscillation of the curved links, in which links the blocks carrying the centre of the lever slide. This centre is marked *m*.

"The function of the link *e'f*, and the attachment of the valve-lever to it at *j*, is to eliminate the error in vibration of the centre *m*, which would otherwise arise from the arc passed through by the lower end of this lever.

"Although the position of the point *j* may be found by calculation, it is much more quickly found by a tentative process; and in order to ascertain if the assumed point *j* be the

Digitized by Google

correct one, we mark off on each side of m vertically the correct vibration required, $n_1 n_2$, which will be the same as the vibration of the connecting-rod on the vertical line zz. Then apply the distance $e'j$ to $d_1 j_1$ and $d_2 j_2$. Thus, if the length jm be applied to $j_1 n_1$ (measuring from j_1), and to $j_2 n_2$ (measuring from j_2), and the point m fall below $n_1 n_2$, in each case it will be necessary to take a point on $e'f$ higher than j. Or if, on the other hand, m falls above $n_1 n_2$, then a point must be taken on $e'f$ lower than j. This point will generally be found on a second trial.

"The point m, as stated, now represents the centre of oscillation for the links and the centre or fulcrum of the lever. And these must coincide where the piston is at each end of the stroke, the lead being there fixed, and the links can be pulled over from backward (2) to forward (1), or any point of expansion, without altering the lead.

"The point g will be the point of attachment for the valve-spindle link, which may be made any convenient length; but from that length as a radius the curve of the links must be drawn from a centre m' on the parallel line mm'. The angle at which this curve is set from the vertical—which is mid gear—will give forward or backward gear; the angle leaning forward or to the front of the engine being forward gear, and the reverse being backward gear. The amount of this angle marked on the curve of vibration at n_1 will be equal to one quarter more than the full opening of the port at that angle; that is, if this measures $1\frac{1}{4}''$ the port will be opened $1''$, and the point of cut-off will be about 0.75.

"Laid out in this form, the leads and cut-off for both ends of the cylinder and for forward and backward going will be practically perfect and equal, and the opening of ports also as near as possible equal. It will be noticed that in this gear the lap and lead are entirely dependent on the action of the lever jmg as a lever, and may be varied according to the length of mg. And the opening of the port beyond the amount given as lead is dependent on the amount of angle imparted to the curved-link oo and will be, as above stated, about four fifths of

Digitized by Google

the amount of that angle from the vertical measured on the line of extreme vibration.

"Deviations from the above positions and proportions may be made without materially altering the correctness of the results. Thus, if it is found necessary to raise or lower the centre *m* to clear wheels, frame, or other gear, this may be done till the angle of *mm'* is out of the parallel by one in thirteen. It is inadvisable to exceed this, but the lines *mm'* and *bb* will be parallel, and the position of the curve *oo* for mid gear will be at right angles to *mm.'*

"Again, the point *e'* may be taken either above or below

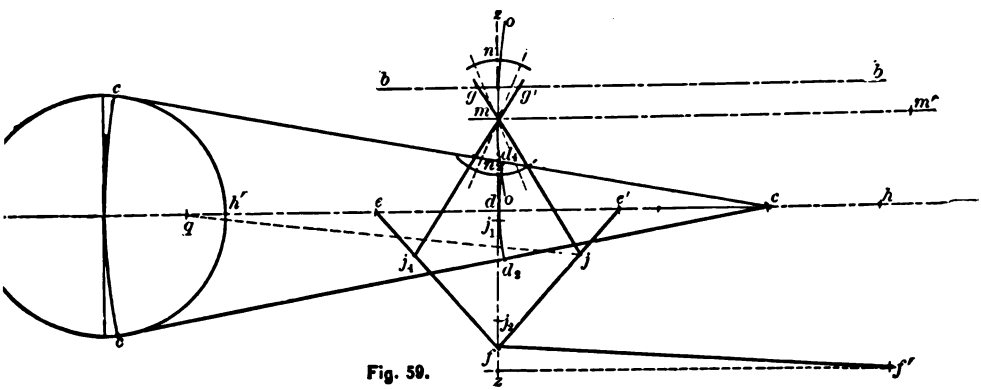

Fig. 59.

the centre line of the connecting-rod, if it be wished to avoid piercing the rod, the pin at *e'* being carried on a small bush or block attached above or below the connecting-rod.

"Again, if the wheels are so small that the link *e'f* would come too low, it may be cut short at the point *j*, and this point connected by a link to a small return crank on the crank-pin, the movement or stroke of this counter-crank being equal to that from *j* to j_4."

35. The Marshall Valve-gear (Figs. 60, 61, and 62).—In this gear "the eccentric-rod bears or constitutes a link, its free end travelling in a slot in a disk, which may be changed in its position. The valve-stem is drawn at right angles to the centre line of the eccentric-rod or link" (Grimshaw).

Digitized by Google

The following method of design is given by Mr. Wm. [illegible]*

In Fig. [illegible] OC is the eccentric which is placed directly opposite to the crank OR. CD is the eccentric-rod, of which the end D swings in the circular arc DBL being suspended from the centre F by means of the swinging-link FD. To A, some point of the eccentric-rod intermediate between C and D, the [illegible] connecting-rod is attached. If the convex side of

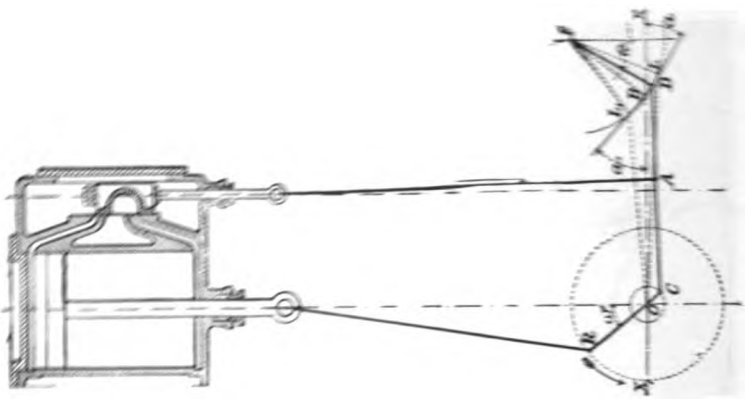

Fig. 40.

the arc traversed by the point D is towards the centre O, the crank will revolve in the direction shown by the arrow. If, on the other hand, the concave side of this arc is towards O, the crank will revolve in the opposite direction.

"The path of the point D is, in reality, the circular arc L_1BL. It will, however, in the first place be assumed that the point D moves along the straight lines BL and BL_1. So long as the swinging-arm FD is moderately long and the eccentricity OC small, the error caused by this assumption may be neglected.

"The errors due to the obliquity of the eccentric and valve connecting-rods are also neglected; but these errors are not large, and are neglected by Zeuner in his well-known treatise

* London *Engineering*, xxxii. 460.

Digitized by Google

on valve-gears. For convenience the following nomenclature will be employed:

OC will be called r,
CD " " " l,
AD " " " k,
FD " " " m;
The angle XBL will be called α,
" " X_1BL_1 " " " α_1.

"The angle between FB and a line drawn through F perpendicular to XX_1 will be called θ.

"Any angle through which the crank may have revolved from its upper dead-centre will be called ω."

"The following is the train of reasoning by which these diagrams were first obtained. (In the following, Fig. 61 is the figure referred to unless it is otherwise stated.)

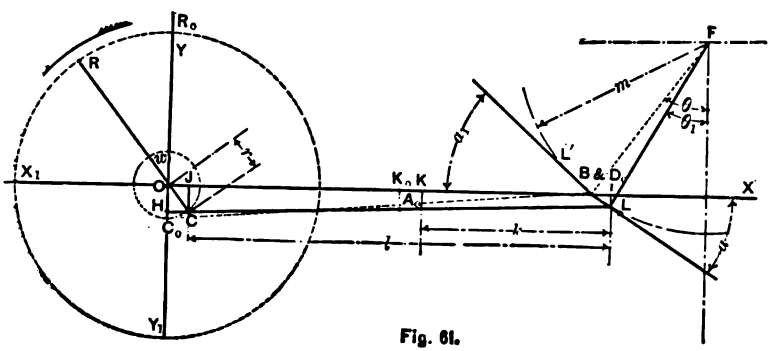

Fig. 61.

"When the crank stands on its upper dead-centre the end D of the eccentric-rod will be at D_0, that is, it will coincide with the point B, and A_0K_0 will be equal to the amount that the slide-valve has moved downwards from its central position. It is therefore clear that A_0K_0 must be equal to (lap + lead). But

$$A_0K_0 = \frac{rk}{l}; \quad \therefore \frac{rk}{l} = (\text{lap} + \text{lead}). \quad . \quad . \quad . \quad (1)$$

"Suppose the crank to have revolved in the direction shown by the arrow through any angle ω. The centre of the eccen-

Digitized by Google

tric will now be in the position C and the other end of the eccentric-rod will have moved to the point D. (It is here assumed that the point D moves along the straight line BL.) The distance that the slide-valve will have moved downwards from its central position is now equal to A_0K. It is required to find some easy graphic method of determining the different values of A_0K for all positions of the crank.

"From C draw CH perpendicular to YY_1 and CJ perpendicular to XX_1. From D draw DI perpendicular to XX_1. Then

$$CH = r \sin \omega = BI \text{ almost exactly.}$$

But $$DI = BI \tan \alpha = r \sin \omega \tan \alpha.$$

Also $$CJ = r \cos \omega.$$

By substitution and reduction we get

$$AK = \frac{rk}{l} \cos \omega + \left\{ r \tan \alpha \left(1 - \frac{k}{l} \right) \right\} \sin \omega. \quad . \quad . \quad (2)$$

"For any given valve-gear the factor $\frac{rk}{l}$ is not variable, and it may therefore be replaced by A. For the same reason

$$\left\{ r \tan \alpha \left(1 - \frac{k}{l} \right) \right\}$$

may be replaced by B. The equation No. 2 will then become

$$AK = A \cos \omega + B \sin \omega. \quad . \quad . \quad . \quad . \quad . \quad (3)$$

"This is, however, the polar equation to the circle so often used by Professor Zeuner in his treatise on the slide-valve, and therefore the valve-diagram for Marshall's valve-gear may be drawn in a manner similar to that used for a simple valve-gear, provided the proper values be assigned to A and B.

"In the circular valve-diagram shown by Fig. 62 equation No. 3 is used in the following manner:

$$OB = OB_1 = \tfrac{1}{2}A = \frac{rk}{2l}; \quad . \quad . \quad . \quad . \quad . \quad . \quad . \quad (4)$$

$$BA = \tfrac{1}{2}B = \tfrac{1}{2} \left\{ r \tan \alpha \left(1 - \frac{k}{l} \right) \right\}; \quad . \quad . \quad . \quad (5)$$

$$B_1A_1 = \tfrac{1}{2}B_1 = \tfrac{1}{2} \left\{ r \tan \alpha_1 \left(1 - \frac{k}{l} \right) \right\}. \quad . \quad . \quad . \quad (6)$$

Digitized by Google

"*To draw the circular valve-diagram* proceed as follows: Draw the two co-ordinate axes cutting one another at the point O (see Fig. 62). Let OR_0 represent the crank on its upper dead-centre. From O set off OB and OB_1 both equal to $\frac{rk}{2l}$. From B set off BA parallel to XX_1 and make $BA = \frac{1}{2}\left\{ r \tan \alpha\left(1 - \frac{k}{l}\right)\right\}$. Also from B_1 set off $B_1A_1 = \frac{1}{2}\left\{ r \tan \alpha_1\left(1 - \frac{k}{l}\right)\right\}$, and parallel to XX_1. (It will be observed that the point A is always in front of the crank. If the valve-gear were so set as to drive the engine the other way round, BA

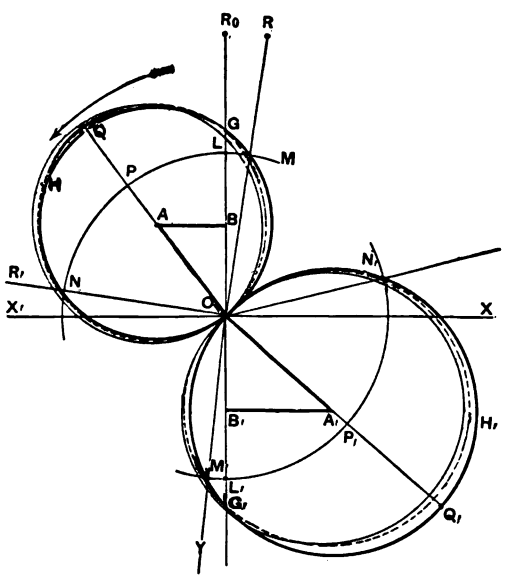

Fig. 62.

would be set off to the right of L_1OR_0 and B_1A_1 to the left of the same line.) From the centres A and A_1, with radii equal to AO and A_1O respectively, draw the circles OGH and OG_1H_1. These circles are the valve-circles, and they approximately represent the movement of the slide-valves.

Digitized by Google

"From the centre O, with a radius equal to the lap of the upper edge of the slide-valve, draw a circular arc cutting the circle OGH in the points M and N. From the same centre with a radius equal to the lap of the lower edge of the slide-valve, draw a circular arc cutting the circle OG_1H_1 in the points M_1 and N_1. Then OMR is the position of the crank when the upper port commences to open to steam, and ONR_1 is the position of the crank when steam is cut off on the downward stroke of the piston. The lead of the upper edge of the slide-valve is LG, and the maximum steam-opening of the upper steam-port is PQ. In the same way the corresponding particulars for the lower steam-port can be determined.

"The diagram Fig. 62 is for an engine of the following dimensions:

		Inches.
Stroke of piston,		48
Throw of eccentric OC	$= r$,	$5\frac{1}{4}$
Length of eccentric-rod CD	$= l$,	66
" " AD	$= k$,	30
" " swinging-lever FD	$= m$,	30
Tan α,		.6
Tan α_1,		.946

"The thick continuous line is the circular valve-diagram for the above engine. The irregularly curved thin line represents the actual movements of the valve. The points of cut-off and the positions of the crank at which the steam openings are maxima are given with a fair approach to accuracy by the circular valve-diagram. In order to determine the leads and the amounts of the maximum steam-openings more correctly, it will be necessary either to make a scale drawing or to find them by calculation. The latter method is the simpler and shorter. When the crank has revolved through any angle ω from its upper dead-centre the slide-valve will have moved from its central position a distance x:

$$x = a\left\{\sqrt{b + c\sin\omega - d\sin^2\omega} - e\right\} + f\cos\omega.$$

Digitized by Google

"In this equation

$$a = m\left(1 - \frac{k}{l}\right), \qquad d = \left(\frac{r}{m}\right)^2,$$
$$b = 1 - \sin^2\theta, \qquad e = \cos\theta,$$
$$c = \frac{2r}{m}\sin\theta, \qquad f = \frac{rk}{l}.$$

"By taking a series of different positions of the crank and setting off along each the corresponding value of x, the valve-diagram may be drawn correctly enough for most purposes. The irregularly curved dotted lines (see Fig. 62) show a diagram drawn in this manner. It will not, however, as a rule, be necessary to take more than one position of the crank at each position of maximum steam-opening. The other particulars are shown with a fair approach to accuracy by the circular valve-diagrams.

"It will be noticed that the calculated valve-diagram coincides fairly well with the actual diagram. The small error which is seen to exist is due to neglecting the obliquity of the eccentric and valve connecting-rods. The longer these rods are made, relatively to the throw of the eccentric, the smaller will this error become.

"The following is the method of determining by calculation the movement of the slide-valve, and in this calculation the assumption that the point D moves along the straight lines BL and BL_1 is not made, Fig. 61:

$$CH = r\sin\omega = BI = m(\sin\theta - \sin\theta_1);$$

$$\sin\theta_1 = \sin\theta - \frac{r}{m}\sin\omega;$$

$$\cos\theta_1 = \sqrt{1 - \sin^2\theta + \frac{2r}{m}\sin\theta\sin\omega - \frac{r^2}{m^2}\sin^2\omega}. \quad . \quad . \quad (7)$$

But
$$D1 = m(\cos\theta_1 - \cos\theta)$$
$$= m\left\{\sqrt{1 - \sin^2\theta + \text{etc.}} - \cos\theta\right\}.$$

Digitized by Google

But $$AK = DI + (r \cos \omega - DI)\frac{k}{l}.$$

Hence $$AK = m\left(1 - \frac{k}{l}\right)\left\{\sqrt{1 - \sin^2\theta + \text{etc.}} - \cos\theta\right\} + \frac{rk}{l}\cos\omega.$$

"When setting off the different values of x on the diagram, Fig. 63, it was assumed that x was equal to AK."

Digitized by Google

CHAPTER IV.

STEAM-CHEST, VALVE, STUFFING-BOX, VALVE-STEM, LINK, ECCENTRIC, ECCENTRIC STRAPS AND RODS, KEYS.

36. Steam-chest walls may be proportioned by the formula given in § 14 for determining the thickness of a cylinder head. The following approximate formulæ given by Weisbach are recommended:

Let l = length of flat plate;
t = thickness of flat plate;
b = breadth of flat plate;
p = intensity of maximum unbalanced pressure upon it, per sq. inch.

Suppose the flat surface to be composed of a great number of parallel strips, each of length l. Let a certain part p' of p cause the strain resulting in these strips. Denote the breadth of each strip by b_1, and the coefficient of resistance to rupture of the material by f; then

$$lb_1p' = 2f\frac{b_1t^2}{l},$$

or

$$l^2p' = 2t^2f;$$

hence

$$t = l\sqrt{\frac{p'}{2f}}.$$

Suppose, now, the flat surface to be composed of a great number of parallel strips, each of length b, and let the pressure $p'' = p - p'$ cause strain in one strip: we then have, as before,

$$t = b\sqrt{\frac{p''}{2f}}.$$

Digitized by Google

Since the deflection of the strips is the same, we may equate the values

$$\frac{l^4 p'}{t^3} = \frac{b^4 p''}{t^3};$$

whence $$p'' = \frac{l^4}{b^4} p'.$$

But $$p' + p'' = p;$$

whence $$p = p' + \frac{l^4}{b^4} p' = p' \left(\frac{l^4 + b^4}{b^4} \right),$$

and $$p' = \frac{b^4 p}{l^4 + b^4}.$$

Hence the expressions for t become

$$t = lb^2 \sqrt{\frac{p}{l^4 + b^4} \cdot \frac{1}{2f}}, \quad \ldots \quad (1)$$

and $$t = bl^2 \sqrt{\frac{p}{l^4 + b^4} \cdot \frac{1}{2f}}. \quad \ldots \quad (2)$$

If $l > b$, we must use equation (2); and if $l < b$, use equation (1).

In case $l = b$, (1) and (2) become

$$t = \frac{l}{2} \sqrt{\frac{p}{f}}.$$

The coefficient f is generally taken as 1800; whence (1) and (2) become

$$t = \frac{lb^2}{60} \times \sqrt{\frac{p}{l^4 + b^4}}, \quad \ldots \quad (3)$$

$$t = \frac{l^2 b}{60} \times \sqrt{\frac{p}{l^4 + b^4}}. \quad \ldots \quad (4)$$

Digitized by Google

Rankine gives the following formulæ for the thickness of flat, unstayed plates, viz.:

$$t = r\sqrt{\frac{p}{f}}$$

for flat circular plates;

$$t = 0.866 l^2 b \sqrt{\frac{p}{l^4 + b^4} \cdot \frac{1}{f}}$$

for flat rectangular plates, where $l > b$.

Seaton gives, as representing successful English practice, the following for the thickness of a cast-iron steam-chest cover:

$$t = 0.7\left[\frac{1}{4} + \frac{p \times \text{diameter of cylinder}}{2000}\right].$$

The materials should be of the very best quality, at least twice melted. If the cover is ribbed for strength, the ribs should be on the outside of the chest. In this case the depth of the web is at least 2.5 times the thickness of the cover, the breadth of the web is generally equal to the thickness, and the pitch of the web is

$$\sqrt{\frac{50t^2}{p}}. \quad \text{(Seaton.)}$$

Frequently the covers are made cellular for marine engines.

The steam-chest must not be large, unless that space is needed for a steam reservoir. If large, the loss from radiation of heat and condensation of steam is increased, and the engine is not so easily controlled by the throttle. In any case, it should be well lagged, to reduce loss from radiation of heat.

The number and size of bolts used for securing the cover to the side walls may be found by the method used in designing those for the cylinder cover, § 15.

Digitized by Google

The thickness of the side walls of the steam-chest may be made equal to that of the cover.

Fig 63 is drawing of the steam-chest of the U. S. S. *Nipsic.**

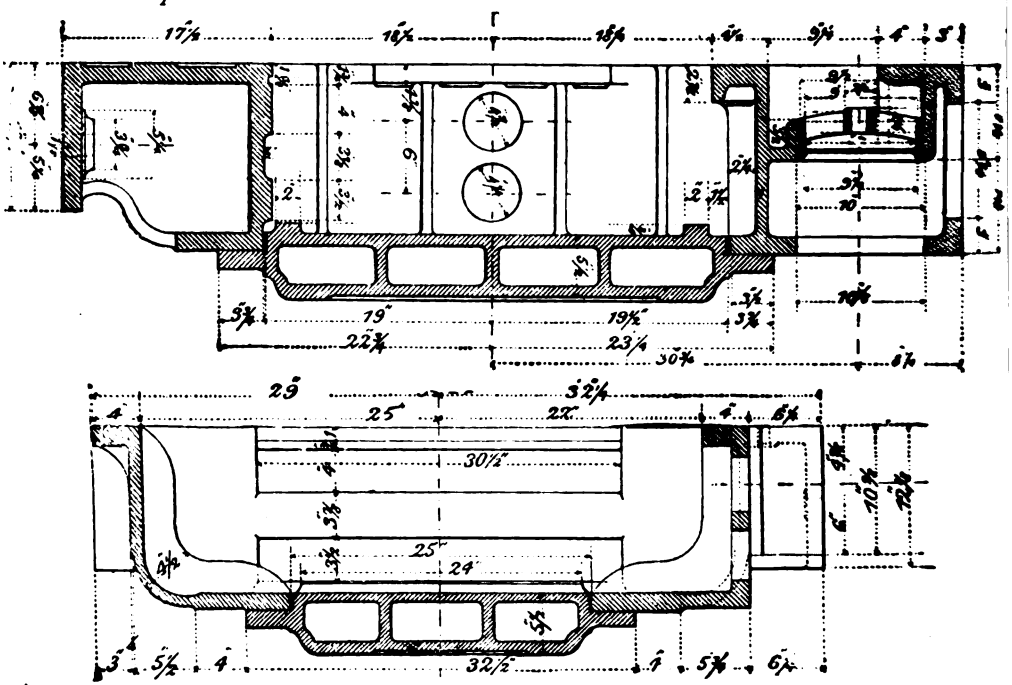

Fig. 63.

37. **The Valve** should be as light as possible. Its depth should be sufficient to give an unobstructed passage for the exhaust. Its width should be greater than the length of the steam-port (see § 17). If the valve is short, in a long-stroke engine, the clearance volume is large; and if it is long, the weight, friction, and diameter of the valve-stem are increased.

The bridge of the valve-seat is usually as wide as the cylinder is thick. *The width of the exhaust-port* should be greater than that of the steam-port (see § 17), and may be designed by the formula—

* From *Engineering*, xxii.

Digitized by Google

Width of exhaust-port = width of steam-port + throw of eccentric − thickness of cylinder.

The length of valve = width of exhaust-port + width of steam-ports at both ends + width of steam- and exhaust-lap at both ends of the valves.

The designer must select the form of valve best adapted to his engine. One suitable for a stationary engine is not necessarily the best for marine practice. The valve most nearly balanced is to be chosen, other things being equal.

The back and sides of the valve may be dimensioned by the formula given in § 36.

The valve-seat is sometimes a plate screwed to the cylinder. This plate is softer than the valve itself, so that the wear will come on the seat rather than the face of the valve.

Fig. 64* is a view of a *piston slide-valve*. It is treated as a simple slide in proportioning the steam features, and as a cylinder in designing the thicknesses. The valve-stem passes through the valve, and is guided by the stuffing-box, and a supplemental piston (not essential), shown to the left.

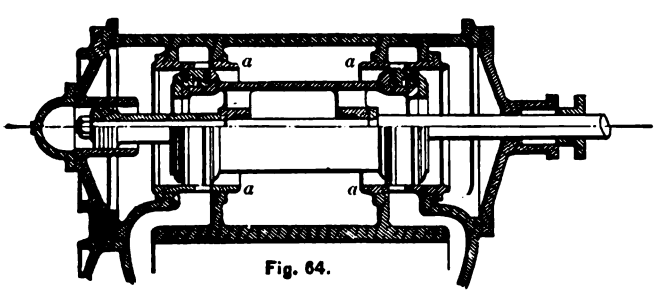

Fig. 64.

The steam-chest is a cylinder of cast-iron, in which are placed the tubes *a*, *a*, of brass or cast-iron, which are accurately bored. The steam may pass through the valve while the exhaust surrounds it, or *vice versa*, so that the valve is nearly balanced. The form shown in the figure is well adapted to marine use. A similar valve, used on the Ide engine, is shown in Fig. 65.

The illustration gives the valve, valve-bushing, and valve-

* From Seaton's *Manual*.

Digitized by Google

chest. Steam surrounds the valve while the exhaust passes through it.

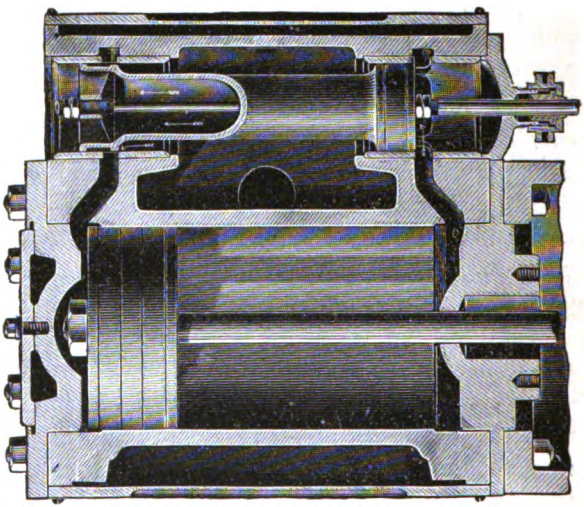

Fig. 65.

Figs. 66 and 66*a* are detailed drawings of the *Meyer valve* as applied to the engines of U. S. S. *Nipsic*.* The former is the *main* and the latter the *expansion* valve. As put together, they are shown in Fig. 70. The method of fastening the main and cut-off valve-stems is illustrated. The movement of the cut-off block is effected by a device similar to that shown in Fig. 67. The valve-stem *BE*, after passing through the blocks *C* and *D*, enters the bushing *B*, being made to turn with it by means of a feather, as shown at *H*.

The bushing passes through a stuffing-box and bracket *K*. By turning *A* the bush turns, but does not move longitudinally, and the cut-off valve-stem turns, bringing the blocks closer together or farther apart as desired. There is a right- and left-handed thread on the valve-stem, as shown. One end of the stem must be smaller than the other in order to allow the blocks to be put on, otherwise the stem may be made in two parts and jointed between *C* and *D*. *E* shows the manner in which

* *Engineering*, xxii. 439.

Digitized by Google

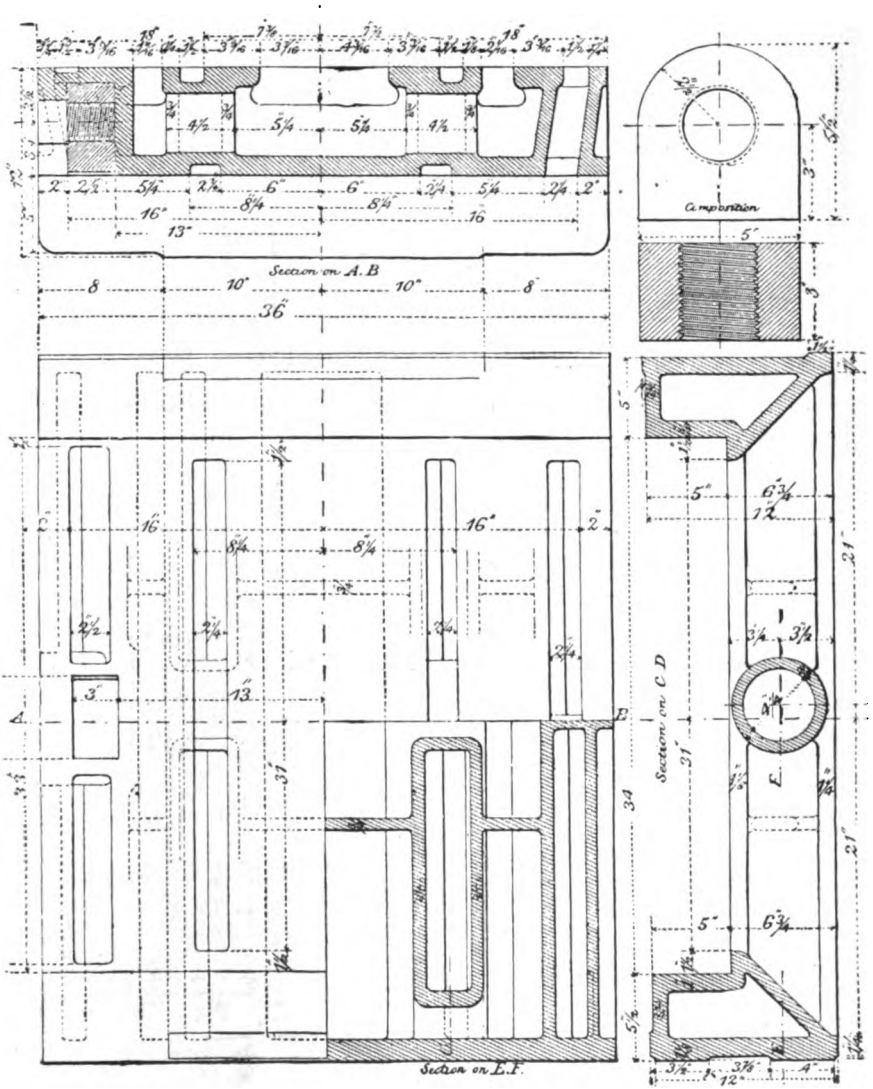

Fig. 66.

the threaded part is secured to the valve-stem. A similar device is shown at *K* in Fig. 77. A pointer *M* travels around a fixed disk *L*, being actuated by an epicyclic gear, and denotes

Digitized by Google

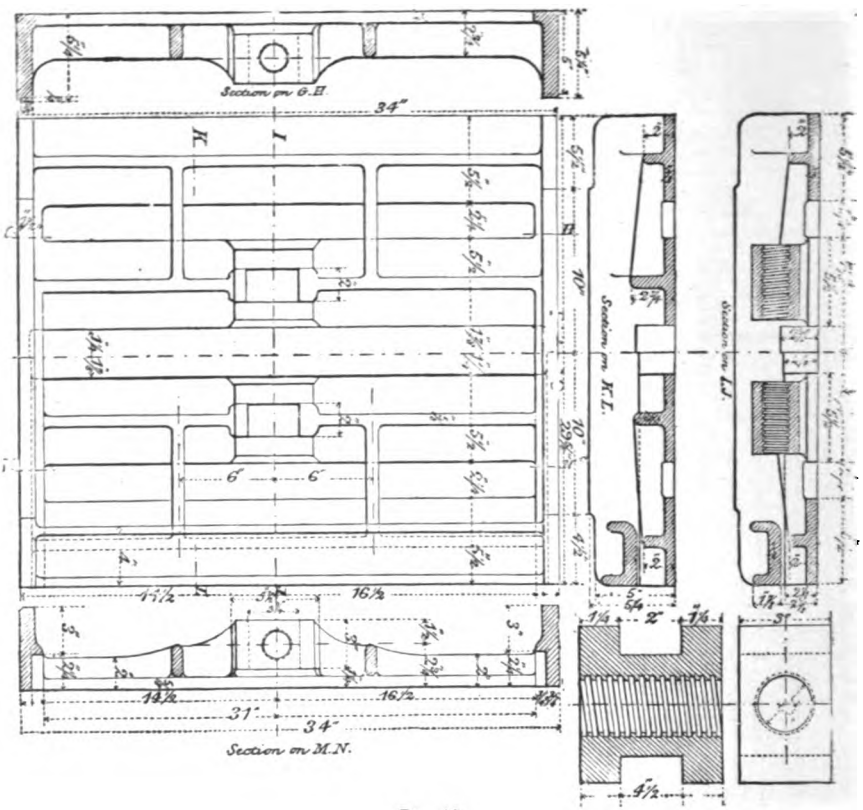

Fig. 66a.

the point of cut-off. Another device for changing the position of the blocks is shown in Fig. 68. *YS* is the stem of the cut-

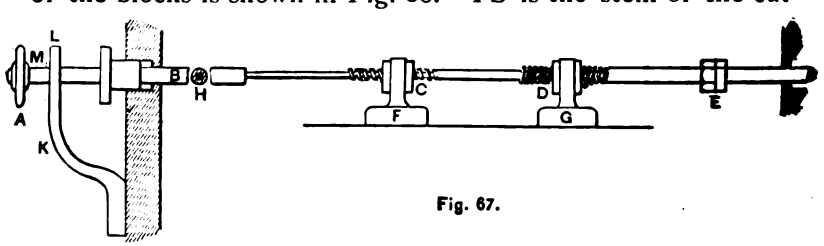

Fig. 67.

off valve. At *T* it enters the block *U*, and is secured to it by the nut *V*. *W* is a small rod screwing into the end of *S*, and

Digitized by Google

having at its free end a pointer *XX*, which is guided by the fork. By turning the shoulder *T*, the stem *S* turns, and, since *W* cannot rotate, the pointer *XX* slides over the fork at the same time that the cut-off blocks are moved. By graduating the fork (by trial) the point of cut-off is known.

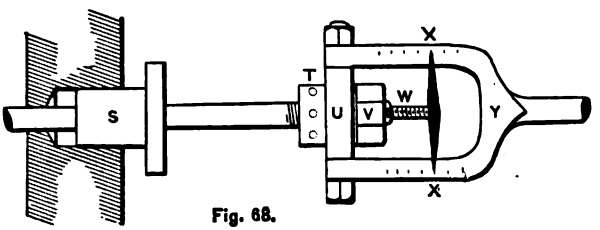

Fig. 68.

Valves are balanced in various ways. Fig. 32, B illustrates the method used by the Baldwin Locomotive Works. The back of the valve is relieved of a full pressure of live steam by separating it from the steam and connecting it with the atmosphere (in this case, or with the condenser if one is used). The joint is made by the use of four coach-springs, which press the metal packing-bars up against the inner surface of the steam-

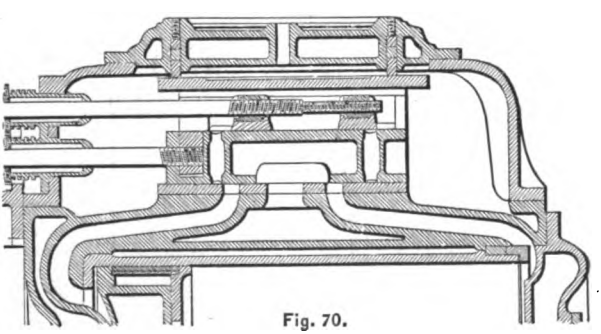

Fig. 70.

chest cover. The figure shows the steam-tight joint between the four bars used as packing pieces. Another method, much used, is illustrated * in Fig. 70. The back of the valve in this

* *Engineering*, xxii.; U. S. S. *Nipsic's* engine.

Digitized by Google

case does not carry the packing pieces, as in Fig. 32, B, but they are secured in a circular groove in the steam-chest cover, and are held against the back of the valve by set-screws, spaced about six inches apart.

38. Stuffing-box.—The diameter and length of the stuffing-box varies with the pressure of the steam and the materials used. It is usually proportionately deeper for a valve-stem than for a piston-rod. The stuffing-box should be used only for making a tight joint; but frequently, as in the case of the horizontal cylinder's stuffing-box, it may become a bearing-surface as well. In this case it should be deeper than otherwise.

The following table is given by Seaton as representing successful English practice. When the steam pressure is greater than 85 lbs. absolute, the dimensions given must be slightly increased.

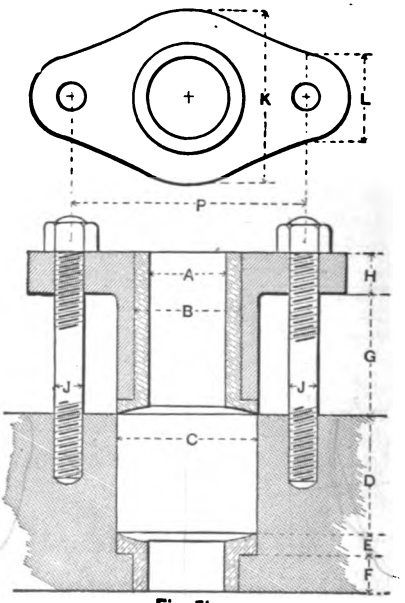

Fig. 71.

The letters given in the table refer to Fig. 71.

Digitized by Google

TABLE SHOWING DIMENSIONS OF STUFFING-BOXES.

A	B	C	D	E	F	G	H		J	K	L	P
	Gland Brass.						Iron.	Brass.				
⅜	.....	1⅜	1 9/16	3/16	⅜	⅞	....	⅜	½	1¾	1	2¼
⅞	.....	1½	1¾	5/16	1 1/16	1	....	⅜	½	1⅞	1	2⅜
1	.....	1⅝	2	3/16	1⅛	1⅛	....	⅜	9/16	2	1⅛	2⅜
1⅛	.....	1¾	2¼	3/16	1⅛	1¼	....	⅜	9/16	2⅛	1⅛	2¾
1¼	.....	2	2⅜	¼	1	1⅜	....	7/16	⅝	2⅜	1¼	3⅛
1⅜	.....	2⅛	2½	¼	1⅛	1⅜	....	7/16	⅝	2½	1¼	3¼
1½	1¾	2¼	2¾	¼	1¼	1½	⅜	7/16	⅜	2¾	1¼	3⅜
1¾	2 1/16	2⅜	2⅞	5/16	1 5/16	1½	1/16	7/16	⅜	3⅛	1½	4
2	2⅜	3	3⅛	⅜	1⅜	1⅝	⅜	½	⅜	3⅜	1⅝	4⅛
2¼	2⅝	3¼	3¼	⅜	1½	1¾	⅜	½	⅞	3⅞	1¾	5
2½	2⅞	3½	3⅜	7/16	1⅝	1⅞	⅞	½	⅞	4⅛	1¾	5¼
2¾	3⅛	3¾	3½	7/16	1¾	1⅞	⅞	.....	⅞	4½	1¾	5½
3	3¼	4¼	3½	7/16	1¾	2	⅞	.....	⅞	5	1¾	5¾
3¼	3¾	4½	3¾	7/16	1¾	2	⅞	.....	⅞	5¼	1¾	6
3½	4	5	4	½	2	2	1	.....	1	6	2	6⅞
3¾	4¼	5¼	4¼	½	2	2⅛	1	.....	1	6¼	Round	7⅛
4	4½	5½	4¼	½	2	2⅛	1	.....	1	9½	.....	7⅜
4¼	4¾	5¾	4½	½	2	2⅛	1	.....	1	9¾	.....	7¾
4½	5	6	4¾	½	2	2¼	1⅛	.....	1	10	.....	8
4¾	5¼	6½	4¾	⅝	2	2¼	1⅛	.....	1	10⅛	.....	8⅛
5	5⅜	6¾	5	⅝	2¼	2¼	1⅛	.....	1⅛	11¼	.....	9
5¼	6⅛	7½	5	⅝	2¼	2⅜	1⅛	.....	1⅛	12	.....	9⅜
6	6⅜	8	5	¾	2¼	2⅜	1¼	.....	1⅛	12½	.....	10¼
6½	7⅛	8½	5¼	¾	2¼	2½	1¼	.....	1⅛	13	.....	10⅝
7	7⅜	9¼	5¼	¾	2½	2½	1¼	.....	1¼	14¼	.....	11⅜
7½	8⅛	9¾	5¼	⅞	2½	2½	1¼	.....	1¼	14¾	.....	12¼
8	8¾	10¼	5½	⅞	2¾	2½	1¼	.....	1¼	15¼	.....	12¾
8½	9¼	11	5½	⅞	2¾	2⅝	1⅜	.....	1¼	16	.....	13⅛
9	9¾	11⅛	5½	1	2¾	2½	1⅜	.....	1⅜	16¾	.....	14
9½	10¼	12	6	1	3	2¾	1⅜	.....	1⅜	17¼	.....	14½

Digitized by Google

Stuffing-boxes of American Locomotives.—Mr. J. G. A. Meyer, in *American Machinist*, X., No. 40, gives the following rules, where A = diameter of the rod in inches (see Fig. 71):

Thickness of stuffing-box in inches

$$= \frac{1}{4} + \frac{A}{4}.$$

This ranges from $\frac{1}{2}$ to $\frac{1}{8}$ in., according to size of rod.

Thickness of flange of stuffing-box

$$= \frac{5}{4}\left(\frac{3}{8} + \frac{A}{4}\right).$$

Diameter of stuffing-box, marked C in Fig. 71, for rods under $3\frac{1}{2}$ in. in diameter,

$$= \frac{3}{2}A + \frac{1}{2}.$$

Depth of stuffing-box, marked D, for ordinary packing

$$= \frac{5}{4} \text{ to } \frac{3}{2} \text{ of } \left\{ \frac{3}{2}A + \frac{1}{2} \right\}.$$

Thickness of brass bushing for a cast-iron gland

$$= \text{from } \frac{1}{8} \text{ to } \frac{3}{16} \text{ in.}$$

Thickness of flange on the gland, marked H,

$$= \left(\frac{A}{4} + \frac{3}{8}\right) \text{ in.}$$

Diameter or length of gland flange, marked P,

$$= A + \left(\frac{3}{2} \text{ to } \frac{3}{5} \text{ of } D\right).$$

Diameter of stud-bolts, when only two are used,

$$= \frac{A}{4} + \frac{1}{4} \text{ in.}$$

If more than two bolts are used they are somewhat smaller in diameter than the formula would give. Successful practice

Digitized by Google

gives, for the diameter of the gland-bolts of piston-rod stuffing-boxes,

Gland-bolt $\frac{3}{4}$ in. for piston under 12 in. diameter;
" $\frac{7}{8}$ in. " " 12 to 17 in. "
" 1 in. " " 18 to 20 in. "
" $1\frac{1}{8}$ in. " " 20 in. and upwards "

The diameter of the gland-bolts for the stuffing-boxes of locomotive valve-stems varies from $\frac{5}{8}$ to $\frac{3}{4}$ inches. Stuffing-boxes are made in various ways. The packing used in any stuffing-box must be suited to the requirements. A packing

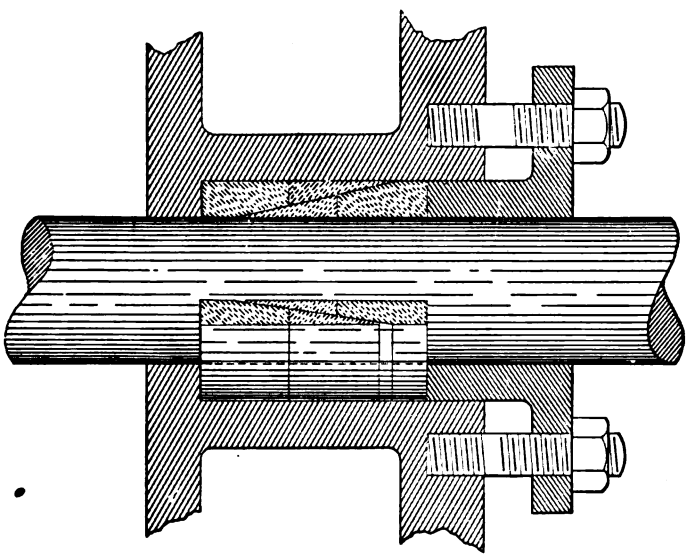

Fig. 73.

suitable for a water-joint will not answer for a steam-joint. Asbestos, canvas with rubber insertion in various forms, hemp steeped in white lead and tallow, lamp-wicking, rubber, soap-stone, etc., are all used, and any of them will answer for water-packing. But metallic packing is coming into general use for steam-joints. The four figures following, taken from *Pro. of Am. Ry. Master Mechanics' Asso.* 1887, illustrate methods successfully used in American locomotive practice. It is to be

Digitized by Google

noticed that in stationary and marine practice the wear on the packing is not nearly so great as with locomotives.

Fig. 73 is John's metallic packing, consisting of about one part by weight of Babbitt to nine parts of lead. By screwing down on the gland the packing pieces are wedged.

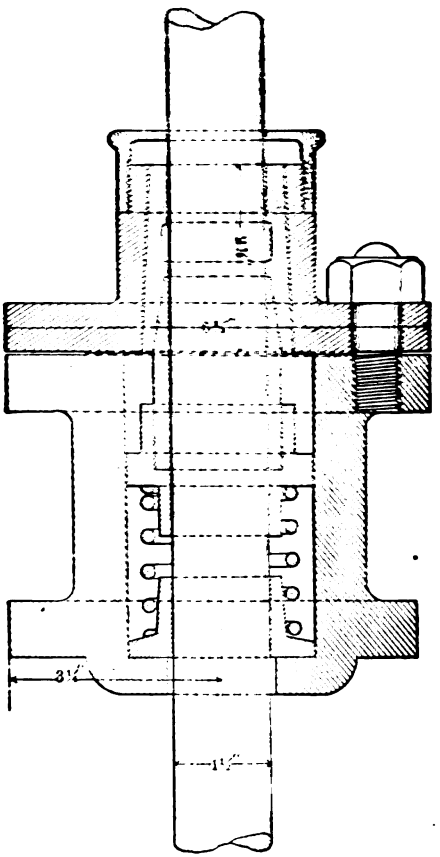

Fig. 74.

Fig. 74 is the Jerome metallic packing, consisting of 30 parts of antimony to 70 of lead. A spring is also used so that the packing will be allowed to accommodate itself to the rod

Digitized by Google

in case the gland is pressed down too much, or when wear occurs.

Twombly's packing (Fig. 75) is recommended for rods having much lateral motion. Each Babbitt-ring is put in in

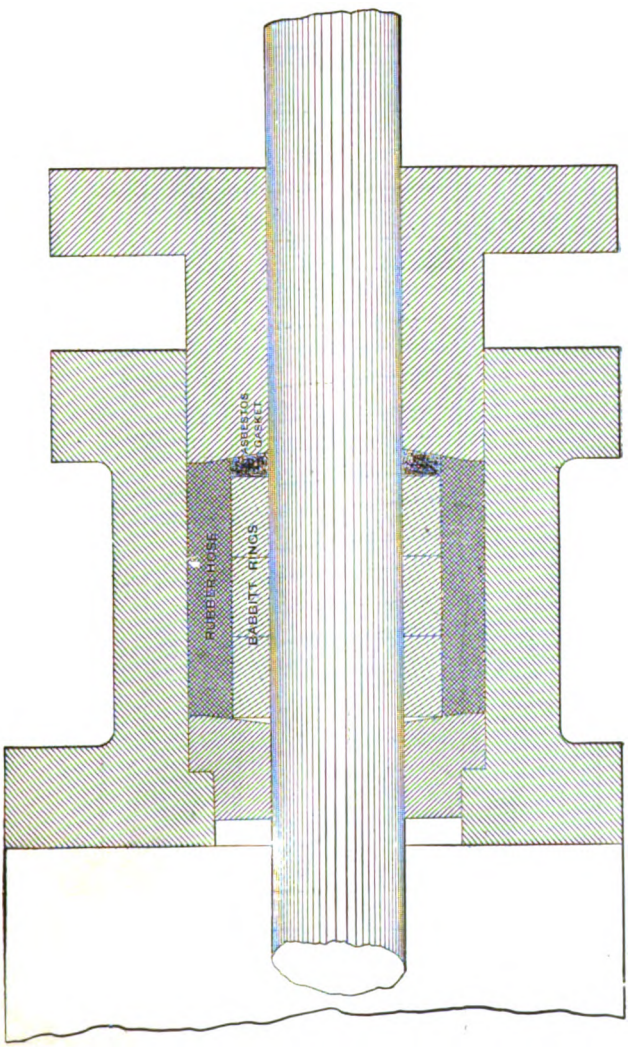

Fig. 75.

Digitized by Google

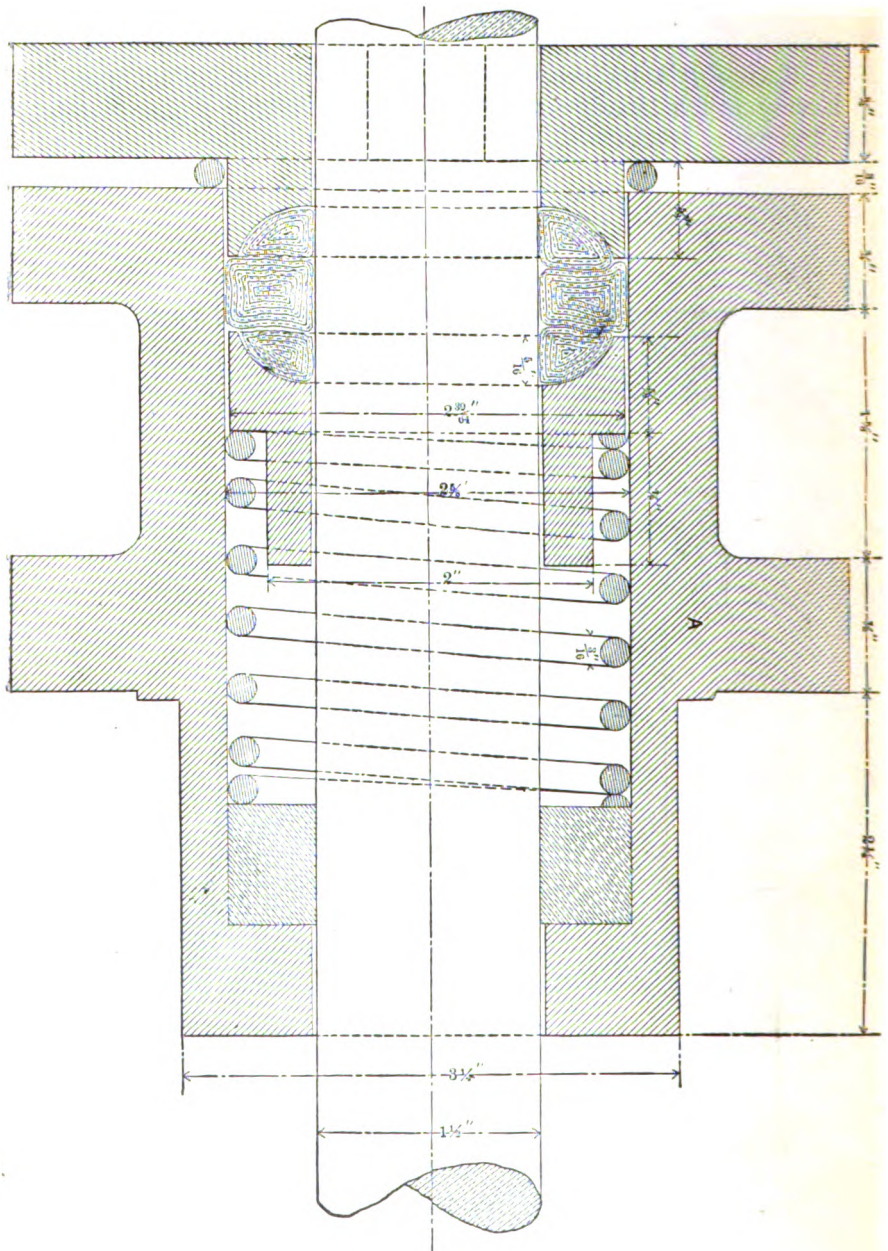

Fig. 76.

Digitized by Google

three sections. A section of rubber-hose and an asbestos gasket aid the Babbitt-rings in making the joint.

Eagle's packing, shown in Fig. 76, consists of a metal ring at the bottom of the box, a spring, and a canvas-rubber packing.

Inaccessible stuffing-boxes are generally manipulated by a worm and worm-wheel leading off to an accessible part.

39. The Valve-stem is always designed to move the valve under the most unfavorable conditions. Hence we will take the valve as unbalanced (for if balanced the joint may leak), and as having a full steam-pressure over its entire back.

Let L and B denote the length and breadth in inches, respectively, of the back, and p the greatest unbalanced pressure on a unit-area of the valve. Then

$$\text{Load on the valve} = pBL.$$

To this must be added the weight of the valve, which, if not yet determined, may be allowed for by substituting the greatest *absolute* pressure, p_1, for p; whence

$$\text{Load on the valve} = p_1BL.$$

Under the most unfavorable circumstances, we will have, as the engine turns, the valve running dry on its seat, which will give a coefficient of friction of about $\frac{1}{3}$. This value of the coefficient is recommended in designing.

The stress exerted by the valve-stem in moving the valve equals, where ϕ equals the coefficient of friction,

$$\phi p_1 BL.$$

Knowing this stress, we are to choose between several formulæ in designing the diameter of the valve-stem.

If we neglect the length, we may find the diameter of the rod whose safe compressive strength of section is equal to this stress. Denoting by f the safe resistance to crushing offered

Digitized by Google

by a sq. in. of the section of the rod, and the diameter of the rod by d, we have

$$\phi p_1 BL = \frac{\pi d^2}{4} f.$$

Whence, to resist crushing, the diameter is

$$d = \sqrt{\frac{p_1 LB}{F}}, \quad \ldots \ldots \quad (1)$$

where $F = 12{,}000$ for wrought-iron and 14,500 for steel rods subjected to compression.

The diameter of the valve-stem may be found by the Gordon-Hodgkinson* formula as follows:

Let P = crushing load on the long valve-stem $= \phi p_1 LB$;

S = area of cross-section of the stem $= \frac{\pi d^2}{4}$;

l = length of stem.

Then for valve-stems, or pillars jointed at one end and fixed at the other (since the length is great compared with the diameter, and the rupture takes place, not by direct crushing, but by bending sideways and bending across), we have

$$P = \frac{fS}{1 + \frac{16}{9} \cdot a \cdot \frac{l^2}{d^2}}. \quad \ldots \ldots \quad (2)$$

Here $a = \frac{1}{3000}$ for wrought-iron and mild steel. Eq. (2) may be changed by substitution to

$$\phi p_1 LB = \frac{f \frac{\pi d^2}{4}}{1 + \frac{16}{9} \cdot \frac{1}{3000} \cdot \frac{l^2}{d^2}}.$$

Whence, if $\phi = \frac{1}{6}$, $f = 5000$,

$$d = \frac{\sqrt{p_1 LB \left\{ 6750 + 4\frac{l^2}{d^2} \right\}}}{2300}. \quad \ldots \quad (3)$$

* Rankine's *Steam-engine*, § 71; *App'd Mech.*, § 328.

Digitized by Google

Since eq. (3) contains the term $\frac{l^2}{d^2}$, the diameter cannot be directly determined. The ratio may be assumed, and d computed, after which the new value of d may be substituted in $\frac{l^2}{d^2}$, and d again found. One substitution will, in general, give a satisfactory result. Another method is to compute d from eq. (1), substitute in $\frac{l^2}{d^2}$, and solve eq. (3).

Reasoning in a manner similar to the above, Seaton deduced the following for the diameter of the valve-stem:

$$d = \sqrt{\frac{p_1 LB}{F}}, \quad . \quad . \quad . \quad . \quad . \quad . \quad . \quad . \quad (4)$$

where $F = 10{,}000$ for long iron stem,
$F = 12{,}000$ " " steel "

Weisbach's method of design, given in *Mechanics of Engineering*, I., § 4, art. 266, is

$$\phi p_1 LB = \left(\frac{\pi}{2l}\right)^2 \times \frac{\pi d^2}{64} \times E,$$

where E is the modulus of elasticity, or 28,000,000 for wrought-iron, and 42,000,000 for steel.

Solving, diameter of rod is

$$d = \frac{l}{4100}\sqrt{p_1 BL}, \text{ for wrought-iron}; \quad . \quad . \quad . \quad (5)$$

$$d = \frac{l}{5000}\sqrt{p_1 BL}, \text{ for steel rod.} \quad . \quad . \quad . \quad . \quad . \quad (6)$$

In using formulæ (5) and (6) it is necessary to introduce a factor of safety, which may be done by increasing p_1, say six times.

A short rule for designing the valve-stem is:

Diameter $= \frac{1}{30}$ diameter of cylinder,
$= \frac{1}{3}$ diameter of piston-rod.

Digitized by Google

In Fig. 77 is shown the main and cut-off valve-stems of the Meyer valve of the U. S. S. *Quinnebaug*. G is the main valve-stem. The nut P drops into a pocket at the end of the valve (as shown in Fig. 31 at Q), while the nuts RR secure the valve-stem to the valve-stem crosshead at F. The valve-stem is prevented from turning by means of a set-screw X. The valve-stem cross-head is represented in plan and elevations by AAA. It is moved by the Stephenson link, S being the journal of the link-block (slotted link). The cross-head is guided by the slides AAA fitting into guides which are attached to the engine-frame. The cut-off valve-stem is shown by $DHKLM$. LL are the cut-off blocks. The stem enters the sleeve M, and turns with this sleeve. The sleeve is turned by an arrangement similar to that shown in Fig. 67. When the threaded section of the cut-off valve-stem is turned, the remainder of the stem does not rotate on account of the collar-joint K. The cut-off valve-stem passes through the stuffing-box at H, and enters the main valve cross-head at D, which slides in the slotted cylinder E. The lug C moves in the slot B, and is the journal for the cut-off valve's eccentric rod.

When the valve-stem is secured to the valve as represented in Fig. 31, the valve, if horizontal, will adjust itself to the valve-seat, and there is no wear in the stuffing-box; but when the valve-stem is rigidly attached, as shown in Fig. 30, the gland of the stuffing-box should permit a slight lateral motion of the valve-stem.

The valve-stem cross-head is often replaced by a rock-shaft. A bracket, with a Babbitt-metal or brass bushing, is often used, as shown at D in Fig. 38.

40. Bolts Used in Link-motions.—If we suppose the bolt to break in single shear, we may make its safe shearing strength equal to the load transmitted through the valve-stem, or

$$\frac{\pi d^2}{4} f = \phi p_1 BL; \quad . \quad . \quad . \quad . \quad . \quad . \quad . \quad (1)$$

whence

$$\text{Diameter of the bolt} = \frac{\sqrt{p_1 BL}}{165}, \quad . \quad . \quad . \quad . \quad (2)$$

where p_1, B, and L have values as used in § 39.

Digitized by Google

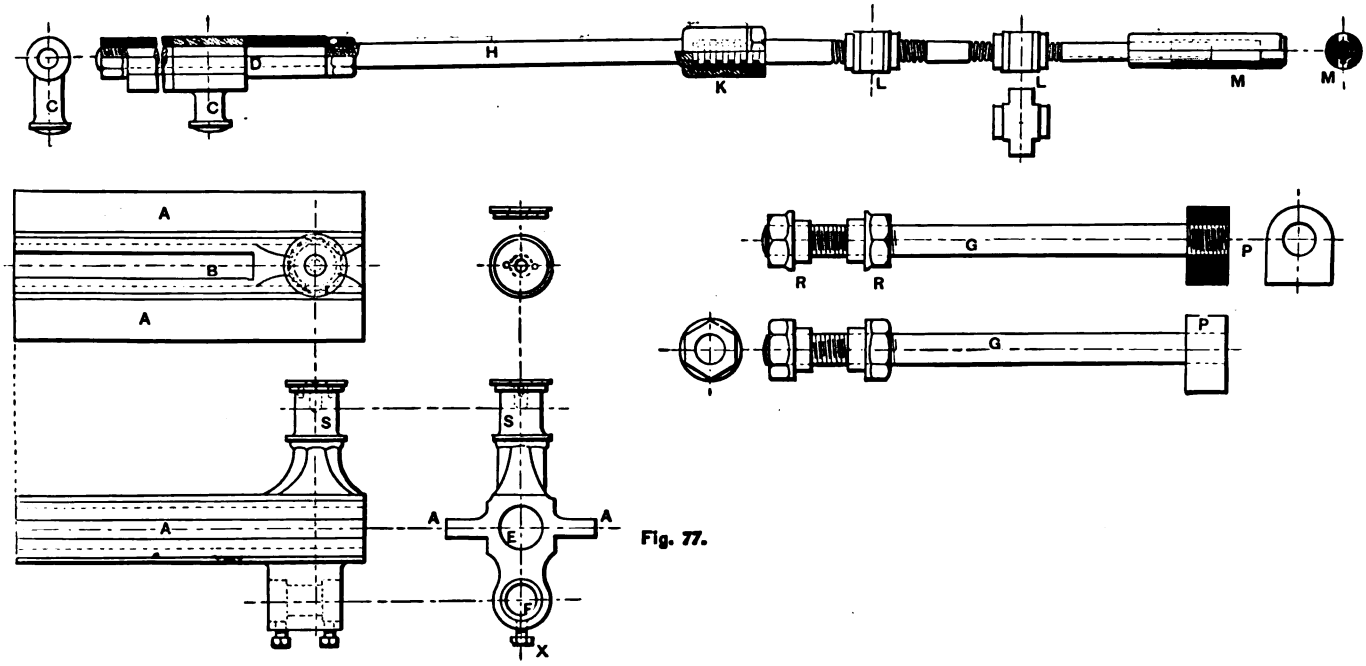

Fig. 77.

Digitized by Google

The shearing resistance, f, is equal to 40,000 to 50,000 for wrought-iron, and 72,000 to 93,600 for steel. Also $\phi = \frac{1}{3}$, and the factor of safety = 6.

Formula (2) applies to the bolt connecting the valve-stem to the link-block and the bolts connecting the eccentric-rods to the link and straps.

The bolts connecting the eccentric-straps may also be designed by this formula.

41. Link and Link-block.—The length and radius of curvature of the link-slot were designed in §§ 29 and 30. We have now to design the link for strength. Successful practice, though varied, would give as the *width of the slot*

0.85 of diameter of the valve-stem,

and *length of the link-block*

2 times the width of the slot.

The link has the greatest stress exerted upon it when at mid-gear, and it is then a beam supported at the ends and loaded at the centre with

$$\phi p_1 BL,$$

whose arm is one half the length of the slot, and moment

$$\phi p_1 BL \times \tfrac{1}{2} \text{ length of slot} = M.$$

This applies equally well to a single or double bar or slotted link. Let b = effective thickness of the link perpendicularly to the valve-stem, h = its effective thickness in the direction of the valve-stem, and f the breaking-across strength of the material used. Then, if the section is rectangular,

$$\tfrac{1}{6} f b h^2 = M. \quad . \quad . \quad . \quad . \quad . \quad . \quad . \quad (1)$$

By assuming one of the terms, b or h, the other one is readily determined.

For a slotted link it is usual to make $h = 2b$, whence

$$b = \sqrt[3]{\frac{6M}{4f}} = 1.14 \sqrt[3]{\frac{M}{f}}. \quad . \quad . \quad . \quad . \quad (2)$$

Digitized by Google

Give values of $\phi = \frac{1}{6}$, factor of safety = 6, breaking-across strength of wrought-iron = 40,000 to 50,000.

A good "thumb-rule" is to make $b = 0.7$ diameter of the valve-stem, when eq. (1) may be solved for h.

In the case of a double-bar link the eccentric-rods are jointed at the bar ends. Then the link-block must be twice as long as for a slotted link; the bars are as deep, along the line of the valve-stem, as the block is long, and $\frac{1}{3}$ as thick as deep.

Seaton gives the following rules *for a slotted link*, where D = diameter of the valve-rod = $\sqrt{\frac{p_1 LB}{12{,}000}}$:

Breadth of link-slot = 0.8 to $0.9D$;
Length of block = 1.8 to $1.6D$;
Thickness of bars of link at middle = $0.7D$;
Diameter of single suspension-rod = $0.7D$;
Diameter of each of the double suspension-rods = $0.55D$;

For a double-bar link, with outside eccentric-rods, whose bolt-centres are from three to four times the throw of the eccentric apart:

Depth of bars = $1.25D + \frac{3}{4}$ in.;
Thickness of bars = $0.5D + \frac{1}{4}$ in.;
Length of link-block = 2.5 to $3D$.

The parts used in making up the Stephenson-link are represented in Figs. 52 and 78. In Fig. 52 the link is slotted; the suspension-rod is secured at about the middle. The eccentric-rods are represented as forked at the ends, and are secured to lugs which are on a line with the valve-stem when the link is in full gear. The link-block is guided in the slot by plates on either face, which lap over the link. At the centre of the link.

Digitized by Google

block is a pin which acts as a journal for the end of the valve-stem.

In Fig. 78 is shown the valve-gear of the SS. *Hunstanton.** The link is made of two parallel bars separated at a fixed distance, and secured at the ends. The link-block is between the bars, and laps over the upper and under surface of each bar as shown. The valve-stem is jointed to the link-block. The eccentric-rods are fastened at the extreme ends so that the valve always partakes of the motion of both eccentrics. The hanger is fastened to one end of the bars.

42. Eccentric-rods.—Donalson gives the following rules for proportioning the *forked ends of eccentrics and similar rods:*

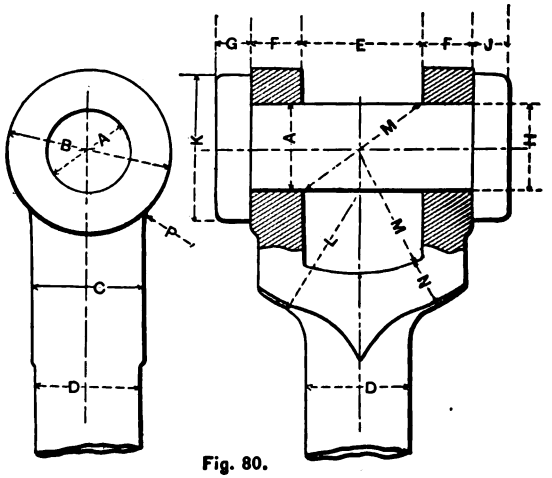

Fig. 80.

$A = D$, diameter of rod and pin;
$B = 2D$;
$C = D + \frac{1}{8}$ in.;
$D = A$;
$E = D$;
$F = \frac{D}{2}$;
$G = \frac{D}{4}$;
$H = D - \frac{1}{16}$ in.;
$J = F = \frac{D}{2}$;
$K = \frac{3}{2}D$;
$L = 1.6D$;
$M = 1.4D$;
$N = 0.72D$;
$P = 2D$.

* From *Engineering*, p. 451, xxxvii.

Digitized by Google

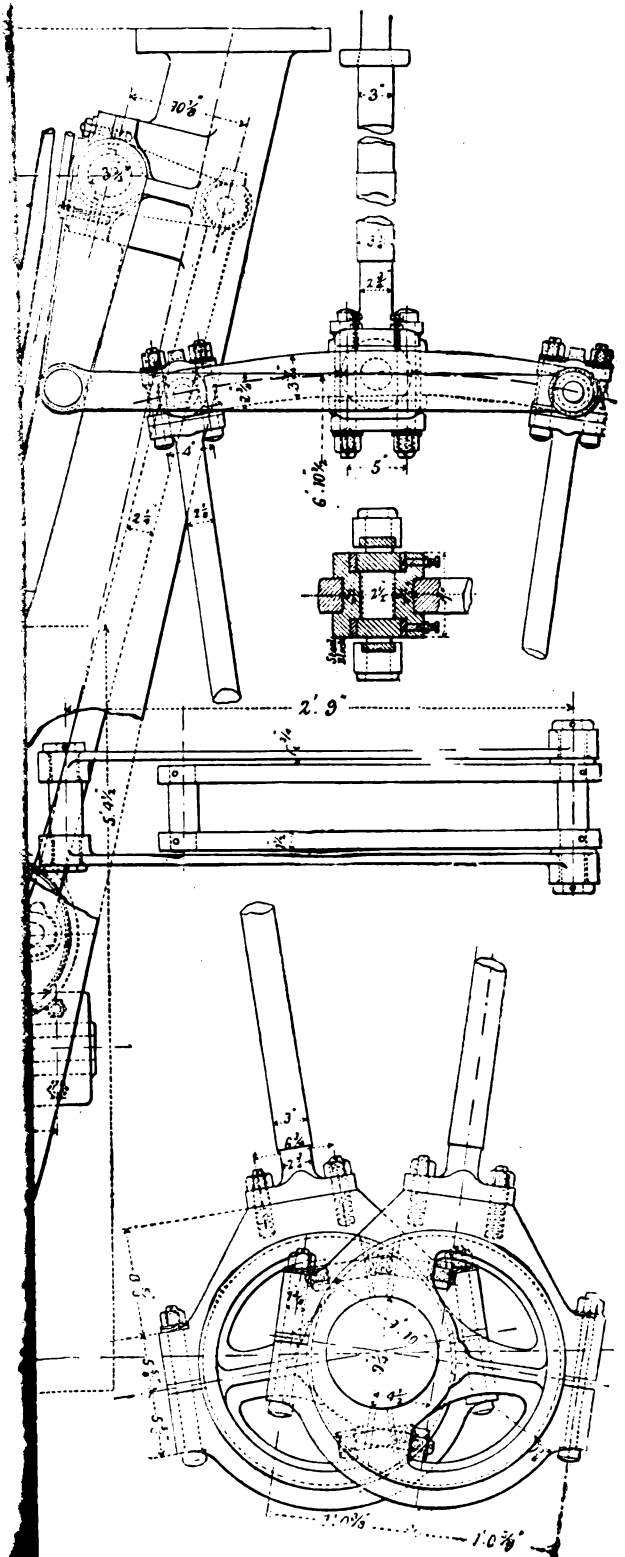

To face page 118.

Digitized by Google

Digitized by Google

The following table gives the relative proportion of the parts named in Fig. 80 for various-sized rods:

A	B	C	D	E	F	G	H	J	K	L	M	N	P
½	½	5/16	½	⅜	⅛	1/16	3/16	½	½	½	⅝	½	⅛
⅝	⅝	½	⅝	⅝	3/16	3/16	5/16	½	1 1/16	⅝	½	5/16	⅝
½	1	⅝	½	½	¼	⅛	7/16	½	1 3/16	⅞	⅝	⅝	1
⅝	1 ¼	⅝	⅝	⅝	5/16	⅛	9/16	½	⅞	1	⅞	7/16	1 ¼
⅝	1 ½	⅞	⅝	⅝	⅜	1/16	11/16	5/16	1 ⅛	1 ⅛	1	½	1 ½
⅞	1 ⅝	1	⅞	⅞	7/16	¼	⅝	5/16	1 ⅜	1 7/16	1 ¼	⅝	1 ⅝
1	2	1 ⅛	1	1	½	¼	⅞	⅜	1 ½	1 ⅝	1 7/16	1 ⅛	2
1 ⅛	2 ¼	1 ¼	1 ⅛	1 ⅛	9/16	5/16	1	⅜	1 ⅝	2 ⅛	1 9/16	⅝	2 ¼

When the end of the eccentric or a similar rod is not forked, but has a single eye, as in Fig. 81, at *A* or *B*, the proportions may be as follows:

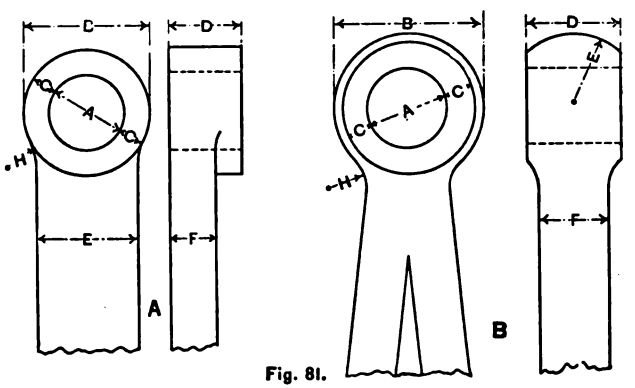

Fig. 81.

For an end like that in Fig. 81 at A:

A = diameter of pin = $D = \dfrac{\text{applied pressure}}{3000}$;

$B = \frac{5}{3}A$; $\quad D = A$; $\quad F = \dfrac{A}{2}$;

$C = \dfrac{A}{3}$; $\quad E = \frac{10}{9}A$; $\quad H = \frac{5}{6}A$.

Digitized by Google

Where the end is as represented in Fig. 81 at B:

A = diameter of pin = D;

$B = 2A$; $D = A$; $F = D$;

$C = \frac{A}{3}$; $E = A$; $H = 2A$.

A Board of U. S. Naval Engineers in 1879, after an extensive experimental investigation of the proportions necessary for the ends of boiler-braces, submitted the following, which will apply equally well to the ends of eccentric-rods, viz.:

For ends made by drawing out the bar, bending it around, and welding:

x = width of bar = diameter of pin or bolt, if of iron;

$1\frac{1}{7}x$ = diameter of pin or bolt, if of steel;

$1\frac{1}{5}x$ = external diameter of the eye, when the thickness of the eye is equal to that of the bar.

For ends cut from flat bars:

x = width of bar = diameter of iron pin or bolt;

$\frac{2}{3}x$ = diameter of steel pin or bolt;

$\frac{3}{4}x$ = breadth across each side of the eye;

$\frac{7}{8}x$ = depth through the crown of the eye, when the thickness equals that of the bar.

For upset ends, forged solid, drilled holes:

y = area of cross-section of bar = area of section of iron pin;

$1.48y$ = area of section across the eye;

$0.9y$ = area of section through the crown of the eye.

The eccentric-rod is equal in effective length to the distance between the centres of the link-block and the eccentric. Its section may be rectangular or circular, the former being preferred, though more expensive. It is similar to a connecting-rod, i.e., a strut jointed at both ends, and may be designed by the formula given in § 82.

For practical purposes of construction, the following may be adopted in working out designs (see § 39):

Area of section of eccentric-rod at small end

$$= 0.00006 p_1 BL \text{ sq. in.}$$

Digitized by Google

Area of section of eccentric-rod at large end

$$= 0.00008 p_1 BL \text{ sq. in.}$$

Seaton recommends the following for cylindrical rods:

$$\textit{Diameter of eccentric-rod at small end} = 0.8 \sqrt{\frac{p_1 BL}{12000}} + 0.2.$$

The shapes used in making eccentric-rods are shown in Figs. 52 and 78.

43. Eccentric-straps may be made of brass, malleable cast-iron, wrought-iron, or cast-steel. If made of iron or steel, they may be lined with brass or white metal. The width of the strap is the same as that of the eccentric-sheave. The straps are usually made in two parts, with lugs, and bolted together. The edges are preferably flanged so as to retain the oil. If the straps are ribbed circumferentially, the strength is increased for the same weight.

The safe shearing-strength of a radial section of the strap should be equal to the load, $\phi p_1 BL$, also equal to the tensile strength of the bolts used in connecting the straps, §§ 39, 40.

Let

A = area in sq. in. of radial section of the strap;

f = shearing resistance = 40,000 to 50,000 for wrought-iron, 72,000 to 93,600 for steel, 18,000 to 27,000 for cast-iron.

Then

$$fA = \phi p_1 BL;$$

$$A = \frac{p_1 BL}{5f}.$$

It is necessary to introduce a factor of safety in this formula.

Seaton recommends the following:

For brass or malleable cast-iron—

Thickness of eccentric-strap at the middle $= 0.4D + 0.6$ in.;

" " " " " " sides $= 0.3D + 0.5$ in.

Digitized by Google

For wrought-iron or cast-steel—

Thickness of eccentric-strap at the middle $= 0.4D + 0.5$ in;
" " " " " " sides $= 0.27D + 0.4$ in.

D in these formulæ is equal to $\sqrt{\frac{p_1 BL}{12000}}$.

Fig. 82 is a drawing of an eccentric-strap as applied to the "Ball" engine.

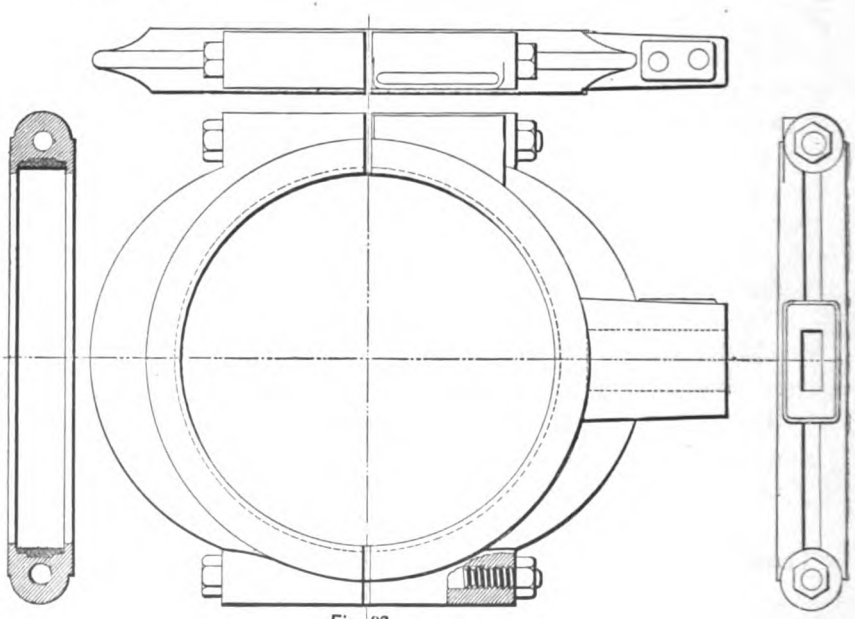

Fig. 82.

44. **Eccentric**—(Fig. 82, B.).—The eccentric-sheave may be made in one or more parts. It must be securely keyed to the shaft. The eccentric may be made of cast or wrought iron, brass, or cast-steel.

The *projected area* of the eccentric, i.e., the diameter times the breadth, must be large enough to give a cool bearing-surface. The pressure on a sq. in. of projected area should not exceed 500 lbs. (see § 84), and may be taken as 300 lbs. for

Digitized by Google

high-speed engines, on account of the sudden variation of the stress exerted through them.

Let D = diameter of the eccentric;
b = breadth.

Then, as in § 39,—

$$300dD = \frac{p_1BL}{5};$$

$$D = \frac{p_1BL}{1500b} \quad \ldots\ldots\ldots \quad (1).$$

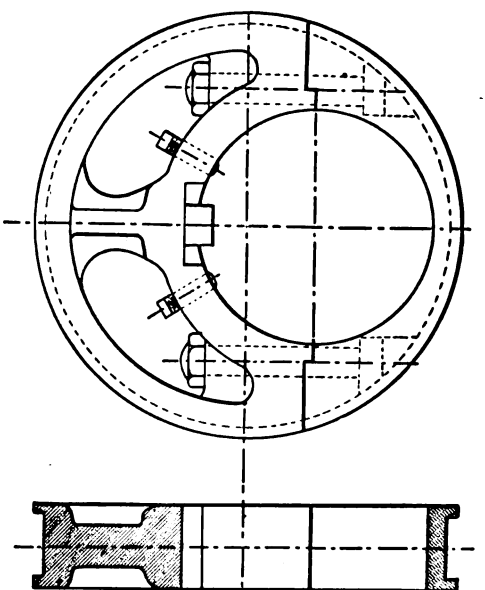

Fig. 82, B.

The eccentric may be considered as a beam fixed at the centre of the shaft, and loaded at the centre of the sheave with a stress of $\frac{p_1BL}{5}$ lbs. The moment of this force may be equal to the moment of the safe tensile strength of the least radial section of the eccentric about the same axis.

Digitized by Google

Let S = this least radial section = tb;
f = safe tensile strength of the metal used;
d = diameter of the shaft;
t = radial thickness of least section;
t' = throw of the eccentric.

Then

$$Sf \cdot \frac{d+t}{2} = \frac{t' p_1 BL}{5} \quad \ldots\ldots\ldots \quad (2)$$

The least radial section of the eccentric may be taken as rectangular, and equal to tb, whence

$$S = \tfrac{2}{b} \cdot \frac{t' p_1 BL}{f(d+t)} \quad \ldots\ldots\ldots \quad (3)$$

The value of t may be found from the formula

$$t = \frac{D - d - 2t'}{2} \quad \ldots\ldots\ldots \quad (4)$$

In general the value of b will be determined from the width along the shaft available for the eccentrics. This being assumed, D may be found from eq. (1), and then t from eq. (3) or (4).

The following equations represent successful English practice, according to Seaton, where $D = \sqrt{\frac{p_1 BL}{12000}}$, as before,

Diameter of eccentric sheave = 1.2 (throw of eccentric + diameter of shaft);
Breadth of sheave at the shaft = $1.15D + 0.65$ in.;
" " " strap = $D + 0.6$ in.;
Thickness of metal around the shaft = $0.7D + 0.5$ in.;
" " at circumference = $0.6D + 0.4$ in.

45. Keys for Shafts must fit the key-ways perfectly on the sides. When this is the case, the moment of the safe shearing

Digitized by Google

section of the key about the axis of the shaft should be equal to the moment of the safe torsional strength of the shaft, and also equal to the greatest moment of the force transmitted through the key (Fig. 22).

Let b = the width of the key-way, or, if more than one key is used, it is the aggregate breadth of the key-ways;

l = the length of the key (usually known beforehand);

f_s = the safe-shearing resistance of the metal used for the key = $\frac{40000}{6}$ to $\frac{50000}{6}$ for wrought-iron, or $\frac{72000}{6}$ to $\frac{93000}{6}$ for steel;

d = depth of key-way;

P = force transmitted, with an arm = r, through the key;

f_t = the safe torsional resistance of the metal used for the shaft = $\frac{50000}{6}$ for wrought-iron;

D = diameter of shaft.

Then

$$f_s bl\frac{D}{2} = Pr; \quad \ldots\ldots\ldots (1)$$

$$b = \frac{2Pr}{f_s lD}. \quad \ldots\ldots\ldots (2)$$

Also,*

$$f_s bl\frac{D}{2} = \frac{\pi f_t D^3}{16}; \quad \ldots\ldots\ldots (3)$$

$$b = \frac{\pi f_t D^2}{8 f_s l}. \quad \ldots\ldots\ldots (4)$$

* The formula for the moment of torsional resistance of a solid shaft is deduced in §321, Rankine's *Applied Mechanics*.

Digitized by Google

The value of l has been determined beforehand from other considerations. Equations (2) and (4) should give the same result. To put them into a more convenient form for use, substitute the values of f_s and f_t, using, say, six as a factor of safety.

Then the equations become, respectively,

$$\left.\begin{aligned} b &= \frac{Pr}{3000lD} \text{ to } \frac{Pr}{4500lD} \text{ for wrought-iron keys;} \\ b &= \frac{Pr}{6000lD} \text{ to } \frac{Pr}{7500lD} \text{ for steel keys.} \end{aligned}\right\} \quad . \quad . \quad . \quad . \quad (5)$$

$$\left.\begin{aligned} b &= 0.393 \text{ to } 0.491 \left(\frac{D^2}{l}\right) \text{ for wrought-iron key and shaft.} \\ b &= 0.211 \text{ to } 0.273 \left(\frac{D^2}{l}\right) \text{ for steel key and wrought-iron shaft;} \end{aligned}\right\} \quad . \quad (6)$$

Equations (5) had best be used in designing the key for the eccentrics, by substituting $p_1 \frac{BL}{5}$ for P, and the throw of the eccentric for r. Comparing the formulæ, we see that a steel key need have but from one half to three quarters the breadth of a wrought-iron key of the same strength.

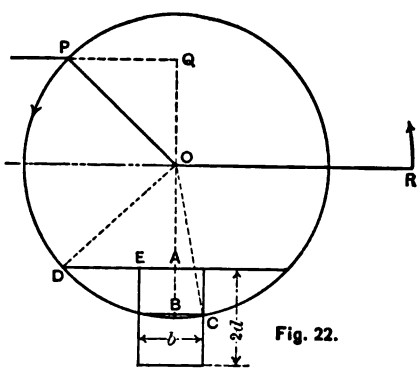

Fig. 22.

The key is represented in Fig. 22, and is enlarged so as to render the following more easily apparent. AB is equal to the depth of the key-way, or d. The shearing strength of the key,

Digitized by Google

width b, or $2CB$, should never exceed the shearing strength of ED. That is, $ED = b$, and $AD = \frac{1}{2}b$. The depth d, allowable for the key-way, may be determined graphically, or as follows:

$$d = OB - OA = \sqrt{\frac{D^2}{4} - \frac{b^2}{4}} - \sqrt{\frac{D^2}{4} - \frac{9}{4}b^2}$$

$$= \frac{D}{2}\left\{\sqrt{1 - \frac{b^2}{D^2}} - \sqrt{1 - \frac{9b^2}{D^2}}\right\}.$$

Expanding each of the binomial surds separately, subtracting and reducing, we have, approximately,

$$\text{Depth of key-way allowable} = d = \frac{D}{2}\left\{4\frac{b^2}{D^2} + 10\frac{b^4}{D^4}\right\} \quad . \quad (7)$$

When more than one key is used, the depth d of the key-way will be reduced. The position for the key is always on the side of the shaft away from the least radial section of the crank or eccentric.

Digitized by Google

CHAPTER V.

COMPOUND ENGINES.

46. Kinds of Compound Engines.—Before considering the design of the piston-rod, connecting-rod, crank-shaft, etc., it is well to discuss the subject of compound engines, since the stresses exerted upon these parts will be somewhat dependent

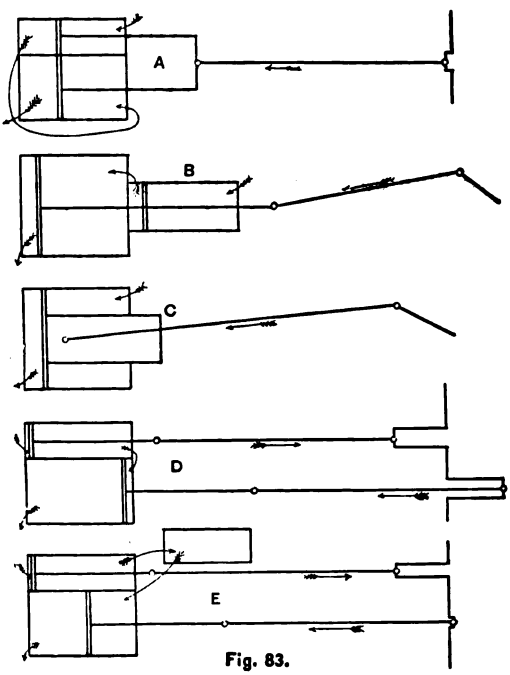

Fig. 83.

upon the kind of engine used. The compound engine is now only at its experimental stage of development, hence we are not surprised that the many able writers differ so widely. The present discussion will relate only to the various methods in actual use for proportioning the cylinder diameters.

The conditions necessary for an economical use of steam,

Digitized by Google

as outlined in the Introduction, are more nearly found in a well-designed compound than in a non-compound engine. Triple-expansion engines are becoming most popular for the marine type, while quadruple-expansion engines are being introduced. Two methods are here given of designing a triple-expansion engine, and six for the design of two cylinder-compound engines.

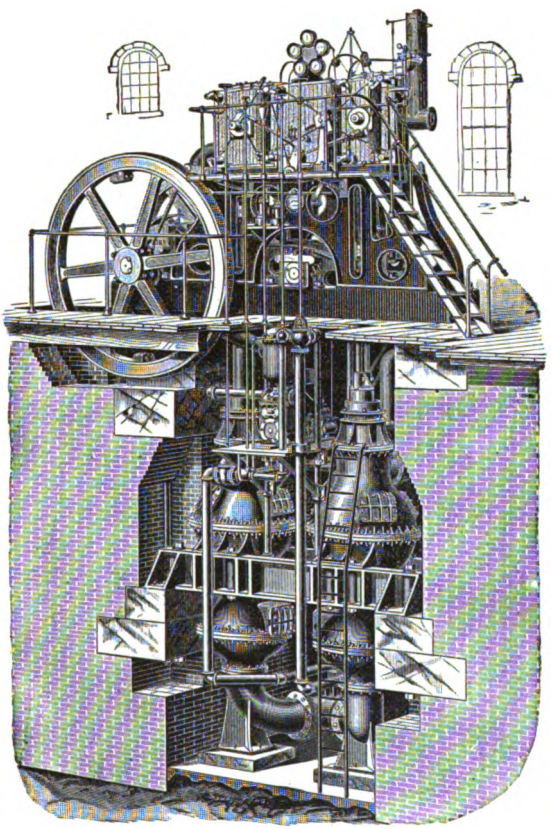

Fig. 85.

The principal types of compound engines are outlined in Fig. 83.

A, *B*, and *C* have the piston-strokes identical, and each is coupled to but one connecting rod. *B* is a tandem, and *C* a trunk, compound engine. No intermediate receiver is required

Digitized by Google

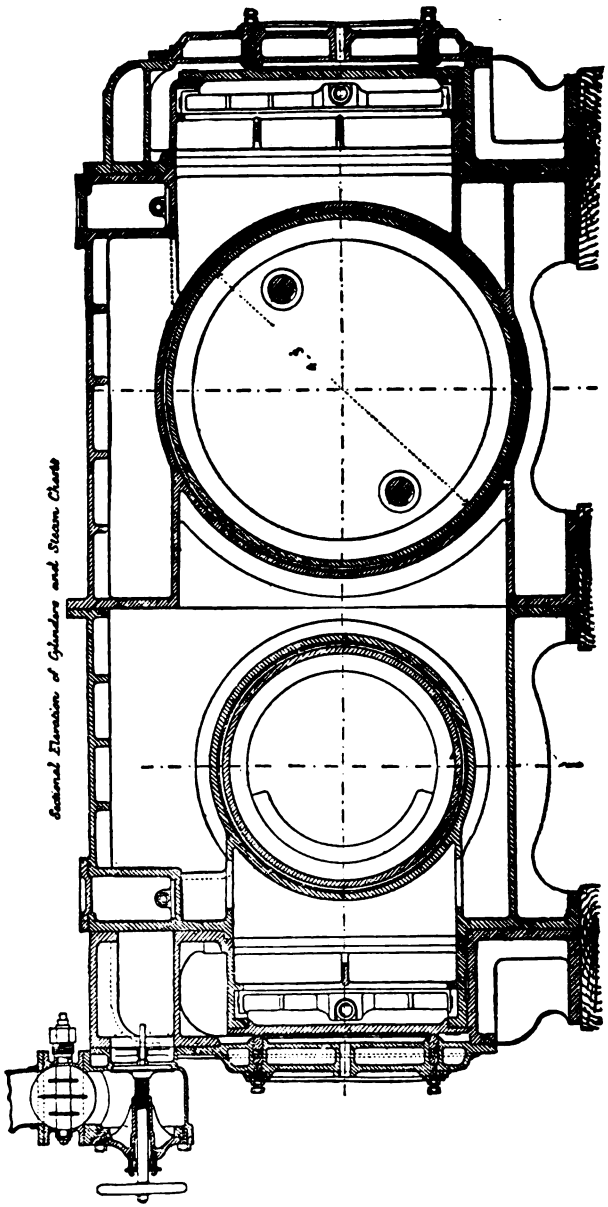

Fig. 86.

Digitized by Google

for *A*, *B*, *C*, or *D*. In *D* the cranks are 180° apart. *E* is a receiver, compound engine with cranks at 90° or otherwise. The theoretical indicator-diagrams for these types will be discussed in Chapter VI.

The types shown in Fig. 83, *A* and *B*, are illustrated in pumping and other engines.

The type *C* of Fig. 83 was applied to the government monitors constructed some twenty years ago, but is seldom used at present.

The type *D* of Fig. 83 is illustrated in the vertical compound pumping-engine made by Deane Mfg. Co., Holyoke, Mass. (Fig. 85). There is no intermediate receiver, and the steam suffers a continuous expansion.

The cross-section of a receiver-engine is shown in Figs. 86 and 18, which illustrate the cylinders of the U. S. S. *Nipsic*.*

Frequently the compound engine is made with three cylinders of equal diameters, the centre cylinder being for high-pressure while the others are for low-pressure steam. The cranks are connected at 120° or otherwise. The engine is also provided with the necessary pipes, stop-valves, etc., so that all the cylinders may be used as non-compound, in case it is desirable to increase the power. This is peculiarly adapted to war-steamers, for the engines can be run economically as compound when cruising, and less economically as simple engines when great speed is desired.

The theory of the action of steam and the development of power in a compound engine is put in the following words by Chief Engineer B. F. Isherwood, U. S. Navy, in his report on the steam-yacht *Siesta*:

"In calculating the indicated horse-power for a compound engine, the common practice is to take for factors the area of each piston and the indicated pressure upon it per square inch as given by the indicator-diagrams from the respective cylinders. Thus the indicated horse-power is obtained for each cylinder, and their sum is the indicated horse-power developed

* From *Engineering*, xxii. 207.

Digitized by Google

by the engine. In fact, however, the indicated horse-powers developed by the engine are not thus distributed, although the aggregate is correct. This method assumes that each cylinder of the compound engine acts independently of the other, as is the case with the simple engine—which is not true. The compound engine is necessarily composed of two cylinders of unequal capacity, while the simple engine is composed of one cylinder only, and if two be used they constitute two independent engines, although coupled to the same shaft and having boiler and condenser in common. The combined cylinders of the compound engine are, in effect, one cylinder only, and their pistons are, in effect, one piston only ; nor can their action be separated in reality, however it may be in appearance, by the arrangement of mechanical details adopted. The interiors of both cylinders of the compound engine are always in common: that is, the spaces in the two cylinders between the inner surfaces of their pistons are in common for one stroke, and those between the outer surfaces of their pistons are in common for the return stroke. The accompanying very simple diagram, which exhibits the compound engine in its most elementary conception, will illustrate these ideas. The diagram Fig. 87 shows the two cylinders of the compound engine arranged tandemwise, with their interiors between the inner surfaces of their pistons in common, and with their pistons rigidly connected to the same piston-rod. With this arrangement the pistons could make only one stroke downward, which is all that is necessary for explanation. To make the return upward stroke, the two cylinders would have to be separated by a partition, and the interior of the small cylinder above its piston would have to be made in common with the interior of the large cylinder below its piston by a communicating pipe. In a working engine the valves controlling the alter-

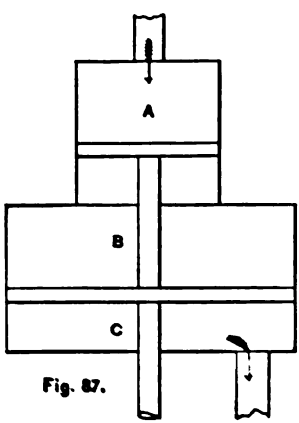

Fig. 87.

Digitized by Google

nate flowings of the steam from the bottom of the small cylinder to the top of the large one and from the top of the small cylinder to the bottom of the large one are the movable partitions supposed in the diagram. The space *A* is supposed to be filled with steam of the boiler-pressure; the space *B* is supposed to be filled with steam of the boiler-pressure expanded with pressures decreasing according to approximately a hyperbolic curve, from the beginning to the end of the stroke of the pistons, the terminal pressure being as much less than the initial pressure as the capacity of the large cylinder is more than that of the small one; and the space *C* is supposed to be filled with steam of the condenser-pressure.

"Now, evidently, the pressure beneath the piston of the small cylinder and above the piston of the large cylinder being the same, and the two pistons being rigidly connected, this pressure is entirely neutralized against the piston of the small cylinder, and upon so much of the piston of the large cylinder as is immediately opposite and equal to the area of the piston of the small cylinder; hence the only portion of the piston of the large cylinder that can produce power is the ring remaining after the subtraction of the piston of the small cylinder. As a consequence, the indicated power exerted by the expanding steam in the large cylinder is represented by the indicated pressure there multiplied by the area of the ring remaining after subtracting the piston of the small cylinder from the piston of the large one. This is the true indicated power developed by the large cylinder, and is as much less than the indicated power, as habitually calculated for that cylinder, as the area of the ring referred to is less than the area of the piston of the large cylinder. Of course, the true net power and the true total power developed in the large cylinder are represented by the product of the ring area referred to into, respectively, the net pressure and the total pressure, the net pressure being what remains of the indicated pressure after subtraction of the pressure required to work the large cylinder and its concomitant parts, *per se*, or unloaded, and the total

Digitized by Google

pressure being the sum of the indicated pressure and the back pressure against the piston of the large cylinder.

"The two pistons of the compound engine being rigidly connected, and the steam-pressure between them being the same per square inch of piston, the true back pressure acting against the piston of the small cylinder is evidently the back pressure acting against the piston of the large cylinder; that is to say, the condenser-pressure in the space *C*, and not the pressure of the expanding steam in the space *B* between the pistons: hence, to obtain the true indicator-diagram from the small cylinder, the indicator must be placed in connection with the space *A* or steam side of the piston of the small cylinder and with the space *C* or exhaust side of the piston of the large cylinder. The indicated pressure for the small cylinder thus obtained would be as much greater than the indicated pressure habitually calculated for that cylinder, as is due to the mean pressure of the expanding steam in the space *B* between the pistons of the two cylinders. Now, this pressure of the expanding steam being what is habitually known as the indicated pressure for the large cylinder, the true method of calculation herein described makes the indicated power of the small cylinder exactly as much greater than what is obtained by the habitual method of calculation as the indicated power of the large cylinder is made smaller, the aggregate indicated power of both cylinders being the same by both methods. The true net pressure for the small cylinder is what remains of the true indicated pressure after subtraction of the pressure required to work the small cylinder and concomitant parts, *per se*, or unloaded, and the true total pressure for the small cylinder is the sum of the true indicated pressure and of the back pressure in the space *C* against the large piston.

"The indicator-diagrams habitually taken from the small cylinder of the compound engine do not correctly represent the effective pressures upon its piston, nor does the habitual co-relation of the indicator-diagrams habitually taken from the two cylinders give a correct idea of the true distribution of the

Digitized by Google

pressures. The true co-relation of the diagrams is as follows:

"Suppose a straight line taken as base and divided into two parts which have the same relation to each other that the volume of the small cylinder has to the volume of the large cylinder less the volume of the small cylinder. Now, having taken a true indicator-diagram from the small cylinder, that is, a diagram made by putting the indicator alternately in connection with the space *A* or steam side of the piston of the small cylinder, and with the space *C* or exhaust side of the piston of the large cylinder, lay off this diagram on the first part of the base representing the volume of the small cylinder. Next, having taken an indicator-diagram from the large cylinder by putting the indicator alternately in connection with the space *B* or steam side of the piston of the large cylinder, and with the space *C* or exhaust side of it, lay off this diagram on the last part of the base representing the volume of the large cylinder less that of the small one; then the two diagrams will form one, showing the true action of the steam and the true distribution of its pressure during a stroke of the *combined* pistons, the total length of the base representing the length of the stroke of a piston. Such a diagram, and only such an one, is comparable with the diagrams taken from the cylinder of the simple engine. All other arrangements or combinations of diagrams from the cylinders of compound engines are factitious and misleading.

"In the diagram, which has the partition between the two cylinders omitted, the pressure in the space *B* must be uniform throughout at any instant, making the back pressure per square inch against the piston of the small cylinder exactly equal to the pressure on the piston of the large cylinder per square inch; but in a working engine, where the large movable partition between the cylinders is replaced by comparatively a very small valve with contracted openings, this equality of pressure upon the two pistons no longer exists, and the back pressure against the piston of the small cylinder is always greater than the pressure upon the piston of the large cylinder.

Digitized by Google

This difference of pressure in practice varies from 1½ to 3 pounds per square inch, according to the size of the opening in the valve relatively to the capacity of the small cylinder, to the length and tortuousness of the passages connecting the two cylinders, to the speed of the pistons, etc. Now, this difference of pressure, whatever it may be,—and it is always something of practical importance,—is additional back pressure against the piston of the small cylinder, and must be added to the back pressure in the space *C* to obtain the true back pressure against which that piston works. Thus, the piston of the small cylinder of the compound engine must always work practically, though not theoretically, against a greater back pressure than the surface of the ring works which remains of the piston of the large cylinder after subtraction of the piston of the small cylinder, by the difference between the pressure per square inch on the opposite sides of the movable partition separating the two cylinders. This additional back pressure is a loss of useful effect peculiar to the compound engine, and has no analogue in the simple engine.

"The foregoing principles governing the compound engine suffer no modification by any variation of the relative position of the cylinders or addition of parts. The interposition of a receiver between the cylinders, whereby their pistons need not come simultaneously to the ends of their strokes, does not in the slightest degree affect the mode of action described; neither does cutting off the steam in the small cylinder, whereby part of the expansion is caused to take place in that cylinder.

"All the steam used in the large cylinder is always expanded steam; nor is the measure of expansion affected by placing a cut-off valve on that cylinder closing at any point of the stroke of its piston. The object of such a valve is to increase the pressure between the piston of the small cylinder and the movable partition separating the cylinders, that is to say, between that piston and the cylinder end towards which it is moving. Such an increase of pressure would be nearly useless, theoretically, in a tandem arrangement of cylinders for the compound engine,

Digitized by Google

which arrangement supposes no space between the cylinders to be filled with steam in its transfer from the small to the large cylinder, except that in the connecting pipes; but just in proportion as space exists between the cylinders, as in the case of a receiver arrangement of them, is the necessity for a cut-off valve on the large cylinder. In some tandem arrangement of cylinders the steam from the small one is exhausted into the jacket of the large one, passing thence into the large cylinder, the jacket in which case forms a receiver; and a cut-off valve, therefore, becomes necessary on the large cylinder. Such a use of the jacket, however, is very injudicious, and should never be resorted to. The large cylinder should receive its steam directly from the small one, and the jackets of both should be kept filled with steam of the boiler-pressure. With a skilful tandem arrangement of cylinders whereby the space between them is reduced to the minimum, but very little is to be gained by the application of a cut-off to the large cylinder; such a valve could not be closed judiciously until the stroke of the piston was at least two-thirds completed. In a theoretical tandem arrangement of the cylinders, that is, with no space between them, and without a cut-off valve on the large cylinder, the initial pressure in the large cylinder would be the same as the final pressure in the small cylinder, which is the effect sought to be produced by the application of a cut-off valve to the large cylinder when a receiver intervenes between it and the small cylinder, in which case the cut-off valve on the large cylinder must close earlier and earlier as the cut-off valve on the small cylinder closes later and later. The receiver arrangement of cylinders, therefore, compels, for maximum economic effect as regards pressure alone, the steam to be cut off very early in the small cylinder, so that a large portion of its expansion may be done there, the remainder being done in the large cylinder, whose cut-off valve should be so adjusted as to make the initial pressure in that cylinder the same as the final pressure in the small cylinder. The object of the short cutting-off in the small cylinder is to enable it to develop, under the preceding condition, a proper power,

Digitized by Google

which it could not do with a late cut-off and the cut-off valve on the large cylinder closing at a point that would make equality of pressure at the end of the stroke of the piston of the small cylinder and at the beginning of the stroke of the piston of the large cylinder. Consequently, in receiver arrangements of cylinders—the steam being used with a given measure of expansion—the ratio of the volumes of the small and large cylinders is much less than *need be* in tandem arrangements. Of course the steam can be cut off properly as short in the small cylinder of the tandem arrangement as in the case of the receiver arrangement, but it need not be for maximum economic effect as regards pressure alone; in fact, it can be worked without expansion in the small cylinder and the entire expansion done in the large one without sacrifice of economic effect due to pressure distribution, provided there be no space between the cylinders, in which case neither of them would require a cut-off valve, and the mechanism could be much simplified.

"In the receiver arrangement of the two cylinders, however, a cut-off upon both is indispensable for maximum economic effect as regards pressure alone. Neither advantage nor necessity requires the receiver to be of greater capacity than the small cylinder, and the pressure in the receiver must be kept the same as the final pressure in the small cylinder, which can only be done by the use of an adjustable cut-off valve on the large cylinder closing at the proper point to produce this effect. Further, this condition prevents the steam from being used without expansion in the small cylinder, as in that case the small cylinder could not develop any power. In order, therefore, that the small cylinder in the receiver arrangement should develop a proper power with the condition of equality between its final pressure and the pressure in the receiver, the steam must be cut off in it considerably before the end of the stroke of its piston. Thus, with the receiver arrangement of the two cylinders, cut-off valves on both are indispensable for maximum economic effect as regards distribution of pressure, and the steam must be used with considerable expansion in the small cylinder to obtain the proper division of power between the

Digitized by Google

cylinders. The manner in which these conditions affect the proportion of the two cylinders is very obvious. If the steam is to be used with a given measure of expansion, say six times, then in a tandem arrangement of the cylinders without cut-off valve on either, the volumes of the two cylinders would be as 1 and 6, but in the case of the receiver arrangement of the two cylinders, cutting off the steam in the small cylinder when one-third of the stroke of its piston was completed, the volumes of the cylinders would compare as 1 and 2, and if the large cylinder were divided into two so as to make a three-cylinder compound engine, all the cylinders could have the same dimensions—a very great mechanical convenience when the engine is a large one.

"When the steam is worked expansively in the small cylinder of the compound engine, the application of a cut-off valve to the large cylinder is a source of much economy independently of the proper distribution of the pressure. In all cases of using saturated steam, considerable condensation is found in the cylinders, due to the alternate heating and cooling of the metal of which they are made, owing to the considerable difference of temperature to which the metal is exposed during a double stroke of the piston. This liquefaction of the steam is a minimum when the steam is worked without expansion, other things equal, and increases *pari passu* as it is worked more and more expansively. Now, whatever portion of the steam entering the small cylinder remains liquefied at the end of the steam stroke of its piston is boiled off or re-vaporized during the return exhaust-stroke under the lessened pressure of the exhaust by the contained heat in the water and in the metal of the cylinder, and this revaporized portion passes to the large cylinder and is used upon its piston without expansion if that cylinder have no cut-off valve; but if it have, then this revaporized portion is worked expansively, and is thus made to give a higher duty. Of course, the less the cylinder liquefaction of steam, the less will be the economic gain due to this cause, and *vice versa*."

There are a great many methods used by successful en-

Digitized by Google

gineers in proportioning the cylinders of a compound engine. In No. 30 of *Pro. of U. S. Naval Insti.*, the author gave nine of them. The following §§ are reprinted (without quotation-marks) from that paper, and give the methods of most practical value.

47. Method of Designing Cylinder Diameters proposed by Passed Assistant-Engineer Charles W. Rae, U. S. N.

THE HIGH-PRESSURE CYLINDER.

p_i = initial absolute pressure in the cylinder;

x = number of times steam is expanded in it;

p_t = terminal absolute pressure $= \frac{p_i}{x}$;

p_m = mean absolute pressure $= \frac{p_i}{x}(1 + \log_e x)$;

p_e = mean effective pressure $= p_m - p_t$.

(This condition ($p_e = p_m - p_t$) is obtained only when a constant back pressure equal to the terminal pressure is maintained in the cylinder.)

Therefore

$$p_e = \frac{p_i}{x}(1 + \log_e x) - \frac{p_i}{x} = \frac{p_i}{x}\log_e x;$$

or

$$\frac{p_e}{p_i} = \frac{\log_e x}{x}.$$

$\frac{p_e}{p_i}$ is the ratio of the mean effective to the initial absolute pressure in the high-pressure cylinder, and the greatest amount of work obtainable from the cylinder is when this ratio is a maximum.

From the above we see that this ratio is equal to an expression $\frac{\log_e x}{x}$, in which x, the number of times the steam is expanded in the high-pressure cylinder, is the only unknown

Digitized by Google

quantity; hence, if we solve this expression for such a value of x as will give $\frac{p_e}{p_i}$ a maximum value, we shall obtain the number of expansions, irrespective of pressure, that will give the greatest power obtainable from the high-pressure cylinder.

Let $y = \frac{\log_e x}{x}$; then $dy = \frac{x\frac{dx}{x} - \log_e x dx}{x^2}$,

whence

$$\frac{dy}{dx} = \frac{1 - \log_e x}{x^2} = 0, \quad \text{or} \quad \log_e x = 1.$$

Hence

$$x = 2.71828 = \epsilon.$$

This value of x is also the base of the Napierian system of logarithms, a natural result, as we have assumed the expansion curve to be that of a rectangular hyperbola.

For this value of x, $\frac{\log_e x}{x} = 0.36788$; therefore the proper number of times to expand the steam in the high-pressure cylinder of a compound engine, to obtain the greatest possible amount of work from it, is 2.72 (nearly).

To reduce the above to the point of cutting off:

Assuming the clearance volume at each end of the high-pressure cylinder to be ten per centum of the stroke displacement of the piston, let us put

s = stroke displacement of the piston;

$0.1s$ = clearance volume at one end;

$1.1s$ = total volume of steam at end of stroke;

$\frac{1.1s}{2.72} = 0.4044s$ = initial volume of steam per stroke;

$0.4044s - 0.1s = 0.3044s$ = initial volume of steam up to the point of cutting off in the cylinder proper.

Hence, with clearance spaces at ends of cylinder equal to ten per centum of the stroke displacement of the piston, the point

Digitized by Google

of cutting off in this cylinder, in order to give 2.72 expansions to the steam, is 0.3044 of the cylinder proper, or, say, 0.3 *of the stroke from commencement.*

THE LOW-PRESSURE CYLINDER.

The size of the low-pressure cylinder depends upon one thing only, *i.e.*, the total number of expansions desired.

The following table gives the cylinder ratio for any number of total expansions from 12 to 5:

Total number of expansions of steam.	Number of expansions in high-pressure cylinder.	Cylinder ratio.
12	2.72	4.41
11	2.72	4.04
10	2.72	3.67
9	2.72	3.31
8	2.72	2.94
7	2.72	2.57
6	2.72	2.20
5	2.72	1.84

The method of procedure, then, to obtain the size of the cylinders of a compound engine, according to this plan, is as follows:

Find the weight of steam evaporated per unit of time at the maximum boiler-pressure. Allow for the fall of pressure between boilers and cylinder, and also for difference between amount furnished by boilers, as per coal consumption, etc., and amount accounted for in the cylinder (*vide* Isherwood's "Experimental Researches in Steam Engineering").

We then have the initial weight, pressure, and consequently volume, of steam used per stroke in the cylinder. The volume of the cylinder is, therefore, 2.72 times as great. The stroke of the piston being governed by considerations of space, etc., and fixed, the area of the high-pressure piston is at once obtained. The above volume includes the clearance space of ten per centum of the stroke displacement.

Knowing the total number of expansions required, the size

Digitized by Google

of the low-pressure cylinder is obtained from the table here given by finding the cylinder ratio in the third column.

This method is applicable only to engines fitted with an intermediate receiver, in which the pressure can be kept practically constant, and equal to the terminal pressure in the high-pressure cylinder. Also, when the ratio of expansion is 2.72 in the high-pressure cylinder, the low-pressure cylinder follows full stroke.

EXAMPLE.—Find the diameters of cylinders for the *Galena* from the following data: Two compound cylinders; crank at 90°; stroke, 3.5 feet; revolutions per minute, 65; initial absolute pressure of steam in boilers, 95 lbs., and 88 lbs. at cylinder; ratio of expansion, 5.32; it is required to develop 1150 I. H. P., using 20 lbs. of steam per I. H. P. per hour.

Solution.—

$$\text{Pounds of steam used per minute} = \frac{20 \times 1150}{60} = 383.33.$$

$$\text{Pounds of steam used per stroke} = \frac{383.33}{130} = 2.95.$$

Volume of one pound of saturated steam of 88 lbs. absolute pressure = 4.9336 cu. feet (see table in the Appendix).

Area of high-pressure cylinder

$$= \frac{2.95 \times 4.9336 \times 144}{0.4044 \times 3.5} = 1481.2 \text{ sq. in.}$$

Diameter of high-pressure cylinder = $43\frac{7}{16}$ in.

$$\text{Ratio of cylinders} = \frac{5.32}{7.22} = 1.96.$$

Area of low-pressure piston = $1.96 \times 1481.2 = 2903.15$ sq. in.

Diameter of low-pressure cylinder = $60\frac{3}{16}$ in.

48. Method of Designing Diameters when there is no "Drop" in Pressure between the Cylinders.

Let A = area of high-pressure piston in square inches;

B = area of low-pressure piston;

$x = B \div A$ = ratio of expansion in low-pressure cylinder;

r = total ratio of expansion of steam in the engine;

$r \div x$ = ratio of expansion in the high-pressure cylinder when there is no "drop" between cylinders.

Digitized by Google

The work done in the high-pressure cylinder is proportional to

$$Ap_1 \left\{ \frac{1 - \log_e \frac{r}{x}}{\frac{r}{x}} - \frac{1}{\frac{r}{x}} \right\},$$

where p_1 = initial absolute pressure of steam at the cylinder.

The total work, if done in one cylinder, is, neglecting back pressure, equal to

$$Bp_1 \left\{ \frac{1 - \log_e r}{r} \right\}.$$

If the work done in each cylinder is the same,

$$Ap_1 \left\{ \frac{1 + \log_e \frac{r}{x}}{\frac{r}{x}} - \frac{1}{\frac{r}{x}} \right\} = \frac{1}{2} Bp_1 \left\{ \frac{1 + \log_e r}{r} \right\};$$

whence

$$\frac{x}{r} \log_e \frac{r}{x} = \frac{1}{2} \cdot \frac{x}{r} \cdot (1 + \log_e r), \quad \text{since} \quad \frac{B}{A} = x;$$

or

$$\log_e r - \log_e x = \tfrac{1}{2} + \tfrac{1}{2} \log_e r;$$

therefore

$$\log_e x = \tfrac{1}{2} [\log_e r - 1]. \quad . \quad . \quad . \quad . \quad . \quad . \quad (1)$$

If the back pressure, p_2, in the condenser is considered,

$$Ap_1 \left\{ \frac{1 + \log_e \frac{r}{x}}{\frac{r}{x}} - \frac{1}{\frac{r}{x}} \right\} = \frac{1}{2} B \left\{ p_1 \left(\frac{1 + \log_e r}{r} \right) - p_2 \right\},$$

which reduces to

$$\log_e x = \frac{1}{2} \left\{ \log_e r - 1 + \frac{p_2 r}{p_1} \right\}. \quad . \quad . \quad . \quad . \quad (2)$$

Digitized by Google

Equation (2) is evidently more practical than (1), and enables the designer to find the ratio of the high-pressure cylinder to that of the low-pressure, as will be seen by the example below.

The method is short and simple, but not so practical as some of the others, as "drop" is not allowed for.

EXAMPLE.—Find diameters of cylinders for the *Galena* from the following data: Two-cylinder compound engine; cranks at 90°; stroke, 3.5 feet; revolutions per minute, 65; initial absolute pressure of steam at boilers, 95 lbs.; ratio of expansion, 5.32; back pressure in the condenser, 5 lbs. absolute; it is required to develop 1150 I. H. P.

Solution.—Substituting value of r in (1), we have $x = 1.4$, whereas r, p_1, and p_2 in (2) give $x = 1.6$. Taking the latter as the more practical, we find that

$$\frac{1}{1.6} = \frac{\text{area of high-pressure piston}}{\text{area of low-pressure piston}}.$$

Calling initial steam-pressure at cylinders 88 lbs.,

$$p_e = \text{mean effective pressure} = 88\left(\frac{1+\log_e 5.32}{5.32}\right) - 5 = 39.16 \text{ lbs.};$$

$$B = \text{area of low-pressure piston} = \frac{1150 \times 33000}{39.16 \times 455} = 2130.8 \text{ sq. ins.}$$

Diameter of low-pressure cylinder = $52\frac{1}{8}$ in.

$$\text{Area of high-pressure piston} = \frac{2130.8}{1.6} = 1331.7 \text{ sq. in.}$$

Diameter of high-pressure cylinder = $41\frac{3}{16}$ in.

49. Rankine's Method of Designing Cylinder Diameters.—Rankine gives the cylinder ratio as $\sqrt{r}$, where r = the total ratio of expansion. The method assumes that the "drop" is *nil;* and that the final pressure in each cylinder is equal to the back pressure, when, if the piston areas are pro-

Digitized by Google

portioned in the ratio of $1 : \sqrt{r}$, the maximum stress will be the same on each piston.

Hence, in order to have equal expansion, equal initial stresses, and equal work performed in each cylinder, design the low-pressure cylinder as if all the work had been done in it; divide the area thus obtained by the square root of the ratio of expansion, and the area of the high-pressure cylinder is found.

EXAMPLE.—Find diameters of the cylinders for the *Galena*, having given the following data: Two-cylinder compound engine; cranks at 90°; stroke, 3.5 feet; revolutions per minute, 65; initial absolute pressure of steam at boilers, 95 lbs.; at cylinder, 88 lbs.; back pressure in condenser, 5 lbs. absolute; ratio of expansion, 5.32; and I. H. P., 1150.

Solution.—Mean effective pressure, if work is all done in one cylinder, $= 88\left(\frac{1+\log_e 5.32}{5.32}\right) - 5 = 39.16.$

$$\text{Area of low-pressure piston} = \frac{1150 \times 33000}{39.16 \times 130 \times 3.5} = 2130.8 \text{ sq. in.}$$

$$\text{Area of high-pressure piston} = \frac{2130.8}{\sqrt{5.32}} = 926.4 \text{ sq. in.}$$

Whence

Diameter of low-pressure cylinder $= 52\frac{1}{8}$ in.

Diameter of high-pressure cylinder $= 34\frac{5}{8}$ in.

50. Prof. A. E. Seaton's Method of Designing Cylinder Diameters.—[See *A Manual of Marine Engineering.*]

Let p_1 = absolute initial pressure of steam;
p_r = absolute receiver pressure of steam;
p_2 = absolute condenser pressure, or back pressure in low-pressure cylinder;
R = ratio of cylinders;
r = total ratio of expansion;
r_h = ratio of expansion in high-pressure cylinder;
r_l = ratio of expansion in low-pressure cylinder;
p_m' = mean total pressure due to r_h and p_1;

Digitized by Google

p_m'' = mean total pressure due to r_l and p_r;
p_m = mean total pressure due to r and p_1;
p_e' = mean effective pressure in high-pressure cylinder $= p_m' - p_r$;
p_e'' = mean effective pressure in low-pressure cylinder $= p_m'' - p_3$.

Also,
$$p_m = p_1\left(\frac{1+\log_e r}{r}\right),$$
$$p_m' = p_1\left(\frac{1+\log_e r_h}{r_h}\right),$$
and
$$p_m'' = p_r\left(\frac{1+\log_e r_l}{r_l}\right).$$

But since the work is to be equally divided between the cylinders,
$$p_m' - p_r = R(p_m'' - p_3). \quad \ldots\ldots \quad (1)$$

And if there is no loss from "drop," and if the mean pressure in the high- is referred to the mean pressure in the low-pressure cylinder, we shall have
$$\frac{p_m' - p_r}{R} + p_m'' - p_3 = p_m - p_3,$$
which, combined with (1), gives
$$\left.\begin{aligned} p_m'' - p_3 &= \tfrac{1}{2}(p_m - p_3) \\ \text{and} \quad p_m' - p_r &= \frac{R}{2}(p_m - p_3) \end{aligned}\right\} \quad \ldots\ldots \quad (2)$$

When x denotes the efficiency of the system, $(1-x)$ is the part of loss due to "drop;" whence
$$\left.\begin{aligned} p_m'' - p_3 &= \frac{x}{2}(p_m - p_3) \\ \text{and} \quad p_m' - p_r &= \frac{xR}{2}(p_m - p_3) \end{aligned}\right\} \quad \ldots\ldots \quad (3)$$

Digitized by Google

"To find the *actual* mean pressures when there is loss due to 'drop,' the value of x must be determined: this may be done by substituting the value of p_m' and p_m'' found from the preceding formulæ; but an approximate value may be found by determining the value of p_r in (3); from the value thus found calculate p_m'', referring the mean pressures of both cylinders to the low-pressure cylinder. If $(P_m - p_2)$ be the equivalent mean pressure thus found, then, approximately,"

$$x = \frac{P_m - p_2}{p_m - p_2}. \quad \ldots\ldots\ldots \quad (4)$$

EXAMPLE.—Find diameters of cylinders for the *Galena*, given the following data: Two-cylinder compound engine; cranks at 90°; stroke, 3.5 feet; revolutions per minute, 65; initial absolute pressure of steam at boilers, 95 lbs.; at cylinder, 88 lbs.; back pressure in condenser, 5 lbs.; ratio of expansion, 5.32; ratio of cylinders, 2.95; and I. H. P., 1150.

Solution.—

$$p_m = 88 \times \frac{1 + \log_e 5.32}{5.32} = 44.16 \text{ lbs.};$$

$$r_h = \frac{5.32}{2.95} = 1.8;$$

$$p_m' = 88 \times \frac{1 + \log_e 1.8}{1.8} = 77.58.$$

$$p_r = 77.58 - \frac{2.95}{2}(44.16 - 5) = 19.82 \text{ lbs.}$$

From (3), therefore,

$$p_c' = 77.58 - 19.82 = 57.76,$$

$$r_l = \frac{p_r r}{p_1} = \frac{19.82 \times 5.32}{88} = 1.2,$$

$$p_m'' = 19.82 \times \frac{1 + \log_e 1.2}{1.2} = 19.52.$$

Digitized by Google

and $$p_e'' = 19.52 - 5 = 14.52.$$

When referred to one cylinder alone,

$$P_m - p_3 = 14.52 + \frac{57.76}{2.95} = 33.76,$$

and

$$p_m - p_3 = 44.16 - 5 = 39.16.$$

Therefore $$x = \frac{33.76}{39.16} = 0.862.$$

Hence

$$\text{actual } p_e' = 0.862(44.16 - 5)\frac{2.95}{2} = 49.69 \text{ lbs.},$$

$$\text{actual } p_e'' = \frac{0.862}{2}(44.16 - 5) = 16.88 \text{ lbs.},$$

and

$$\text{actual } p_r = 77.58 - \frac{2.95}{2}(33.76) = 27.5 \text{ lbs.}$$

The values of p_e, p_e'', and p_r, although given as actual values, are not practically correct, but may be called the *theoretical mean pressures.* In actual practice, however, these pressures will be changed on account of a variety of causes, which in a marine engine are chiefly:

(1) Friction in stop-valves on boilers and engine and in pipes connecting these.

(2) Friction or "wire-drawing" of the steam during admission and cut-off.

(3) Liquefaction of steam during admission and expansion.

(4) Exhausting before the piston has reached the end of the stroke.

(5) Compression, and back pressure due to lead.

(6) Friction in steam-ports, passages, and pipes.

(7) Clearance.

"It will be seen, then, that the actual mean pressure ex-

Digitized by Google

pected to be obtained from the indicator-diagram of an engine depends upon the proportion and arrangement of the cylinders and their valves, etc.; and in calculating the *expected* mean pressure from the *theoretical mean pressure*, due allowance must be made in each individual case."

"If the mean pressure be calculated by the methods here given, and the necessary corrections made for clearance and compression, the expected mean pressure may be found by multiplying the results by the factor in the following table:

Particulars of Engine.	Factor.
(1) Expansive engine, special valve-gear, or with a separate cut-off valve, cylinders jacketed,	0.94
(2) Expansive engine, having large ports, etc., and good ordinary valves, cylinders jacketed, .	0.90 to 0.92
(3) Expansive engines with the ordinary valves and gear, as in general practice, and unjacketed, ...	0.80 to 0.85
(4) Compound engine with expansion-valve to H. P. cylinder; cylinders jacketed, large ports, etc., ...	0.90 to 0.92
(5) Compound engines with ordinary slide-valves, cylinders jacketed, good ports, etc., . . .	0.80 to 0.85
(6) Compound engines with early cut-offs in both cylinders, without jackets and expansion valves, as in general practice in the merchant service, ...	0.70 to 0.80
(7) Fast-running engines of the types and design usually fitted in war ships, ...	0.60 to 0.80

"If no correction be made for the effects of clearance and compression, and the engine is in accordance with general modern practice, the clearance and compression being proportionate, then the theoretical mean pressure may be multiplied by 0.96, and the product again multiplied by the proper factor in the table above, the result being the expected mean pressure."

Digitized by Google

Hence the mean effective pressure in the high-pressure cylinder, instead of being 49.69 lbs., will be

$$49.69 \times 0.96 \times 0.8 = 38.16 \text{ lbs.},$$

by assuming the *Galena* to belong to the best type under class 7 in the table.

Similarly, the mean effective pressure in the low-pressure cylinder will be

$$16.88 \times 0.96 \times 0.8 = 12.96 \text{ lbs.}$$

Substituting the values found, and taking 575 as the horse-power to be developed in each cylinder, we find that the area of the low-pressure piston is

$$\frac{575 \times 33000}{130 \times 3.5 \times 12.96} = 3216.5 \text{ square inches,}$$

and the diameter of the low-pressure cylinder = 64 inches.

The area of the high-pressure piston

$$= \frac{575 \times 33000}{130 \times 3.5 \times 38.16} = 1092.8 \text{ square inches,}$$

which is also $\frac{3216.5}{2.95}$; hence the diameter of the high-pressure cylinder is $37\frac{5}{16}$ inches.

SEATON'S TABLE SHOWING CYLINDER RATIO OF COMPOUND ENGINES.

Type of Engine.		Absolute boiler pressure.								
		85	95	105	115	125	135	145	155	165
Tandem	Ratio of large to small cylinder	4 to 3·5	4	4·5	5					
2-cylinder receiver	ditto.	3	3·75	4	4·5					
3-cylinder receiver	Combined of low-pressure to small cylinder		3·4	3·7	4					
Triple expansion	Ratio of low-pressure to small cylinder					5	5·4	5·8	6.2	6.6

Digitized by Google

51. Design of Diameters for Equal Expansion and Equal Work in each Cylinder (Fig. 88).—Lay down a diagram corresponding to the ratio of expansion and pressures used as if it were for a single cylinder using all the steam and developing the power required; then divide the diagram by the line XY, so that the areas A and B shall be equal.

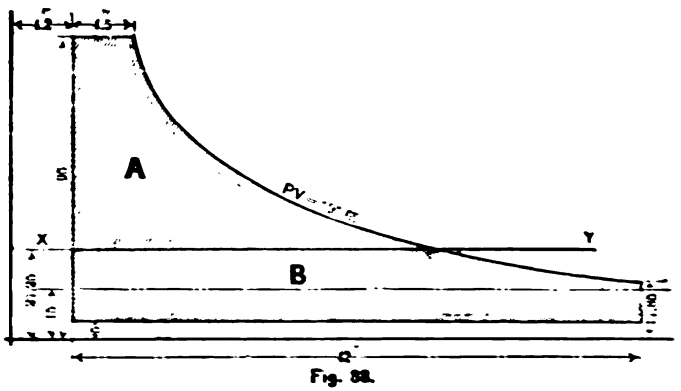

Fig. 88.

The mean ordinate of A will be the mean effective pressure in the high-pressure cylinder; and that of B, the mean effective pressure on so much of the low-pressure piston as is left after subtracting from it the area of the small piston. Hence the total area of the large piston is the sum of the area so found and that of the high-pressure piston (see § 46).

EXAMPLE.—Find the cylinder diameters for the receiver, two-cylinder engine of the *Galatea*, with the following data: I. H. P., 1150; stroke, 3.5 feet; revolutions per minute, 65; initial absolute pressure of steam, 95 lbs.; back pressure, 5 lbs.; and ratio of expansion, 5.32, with clearance of ten per cent.

Solution.—The mean pressure of the card A is 29.8 lbs. Hence, if the work is equally divided between the two cylinders the area of the high-pressure piston is

$$\frac{575 \times 33000}{455 \times 29.8} = 1303.32 \text{ square inches.}$$

The diameter of the high-pressure cylinder is $40\frac{3}{4}$ inches.

Digitized by Google

The mean pressure of the card B is 19.75 lbs. Hence if the work is equally divided between the two cylinders, the area of the low-pressure piston *minus* the area of the high-pressure piston is

$$\frac{575 \times 33000}{455 \times 19.75} = 2111.68 \text{ square inches.}$$

Hence the area of the large piston is $2111.68 + 1303.32 = 3415$ square inches, and its diameter is $65\frac{1}{8}$ inches.

52. Graphic Method of Designing Cylinder Diameters when "Drop" is Considered (Fig. 89).—Draw the theoretical diagram $ABCDE$ representing the action of the steam on

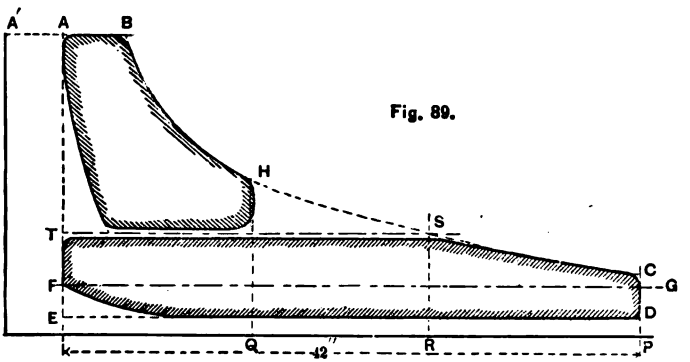

Fig. 89.

the supposition that the whole of the expansion is done in the low-pressure cylinder, PQ being the zero and FG the atmospheric lines. $\frac{ED}{AB}$ is the total apparent rate of expansion in the cylinders, neglecting clearance. In drawing the curve the clearance has been taken as ten per cent; hence the actual ratio of expansion is $\frac{A'A + ED}{A'B}$. Assuming the point of cut-off in the low-pressure cylinder, the line ST is found, which will divide the card into two areas; then, assuming the ratio of cylinders, the line HQ is drawn. Next round off all the cor-

Digitized by Google

ners as shown; then the card will be similar to the combined card from a compound engine. The mean effective pressure of this combined card is the mean pressure on the large piston, supposing all the work to be done in the low-pressure cylinder. Knowing this, the area of the large piston is found, and then that of the high-pressure piston, as shown in the following:

EXAMPLE.—Find cylinder diameters for the two-cylinder, receiver engine of the *Galena* when the I. H. P. is 1150; stroke, 3.5 feet; revolutions per minute, 65; initial absolute pressure of steam, 95 lbs.; back pressure, 5 lbs.; rate of expansion of steam, 5.32; and clearance, ten per cent.

Solution.—Assuming ratio of cylinders as 2.95, and the point of cut-off at three-fourths stroke in the large cylinder, the effective pressure of the combined card is 31.125 lbs., which will give for the area of the large piston

$$\frac{1150 \times 33000}{455 \times 31.125} = 2688.17 \text{ square inches.}$$

The mean pressure of the lower part of the combined card is 15.925 lbs., which gives for the area of the large piston

$$\frac{575 \times 33000}{455 \times 15.925} = 2622.80 \text{ square inches.}$$

The former value gives for the area of the high-pressure piston $\frac{2688.17}{2.95} = 911.24$ square inches; while the latter value gives an area of $\frac{2622.8}{2.95} = 889.08$ square inches. The mean effective pressure of the upper part of the combined card is 45 lbs., which gives an area of $\frac{575 \times 33000}{455 \times 45} = 926.75$ square inches for the small piston. Here we see that the results check, and we may take as the area of the small piston 911.24 square inches, corresponding to a diameter of $34\frac{1}{16}$ inches; and 2688.17

Digitized by Google

square inches for the low-pressure piston, giving a diameter of $58\frac{1}{2}$ inches.

53. Summary.—A comparison of the diameter of the *Galena's* cylinders, as found by the different methods, is shown in the following table:

Method of Design.	Diameter of the high-pressure cylinder in inches.	Diameter of the low-pressure cylinder in inches.
§ 47, Rae	$43\frac{7}{8}$	$60\frac{1}{8}$
§ 48, No "drop"	$41\frac{7}{8}$	$52\frac{1}{8}$
§ 49, Rankine	$34\frac{3}{8}$	$52\frac{1}{8}$
§ 50, Seaton	$37\frac{7}{8}$	64
§ 51, Graphical	$40\frac{3}{8}$	$65\frac{3}{8}$
§ 52, "	$34\frac{1}{8}$	$58\frac{1}{8}$
Actual diameters are	42	64

54. Cylinder Ratio.—The cylinder ratio may be, within limits, almost any value, provided that the valves are set so that initial strains and work done are equalized between the cylinders. A rule in general use is to make the cylinder ratio equal to the total ratio of expansion multiplied by the decimal part of the stroke completed by the small piston when the steam is cut off in its cylinder. Suppose, for example, that the total ratio of expansion of steam is 12, and that steam is cut off at 0.4 stroke in the small cylinder, then the ratio of cylinders, as generally adopted, is $(12 \times 0.4 =) 3$. A table at the end of § 50 gives the ratio of cylinders for various engines under various pressures.

The most economical ratio of expansion of steam in two-cylinder compound engines using steam from 75 to 95 pounds absolute pressure per square inch, has been found by Mr. C. E. Emery, from experiments with U. S. revenue steamers, to be given by the equation

$$\text{Ratio of expansion} = \frac{22 + \text{initial absolute pressure}}{22}.$$

Digitized by Google

55. Design of the Triple-expansion Engine. (*Graphic Method.*)—The triple-expansion engine is but imperfectly developed, yet when the pressure of steam is 100 lbs. absolute or more a saving of from 15 to 20 per cent has been realized by its use, over an ordinary compound engine using steam from 60 to 90 lbs., Any of the methods given for the design of ordinary compound engines will apply, with slight changes, to this type. Two methods will be given as follows:

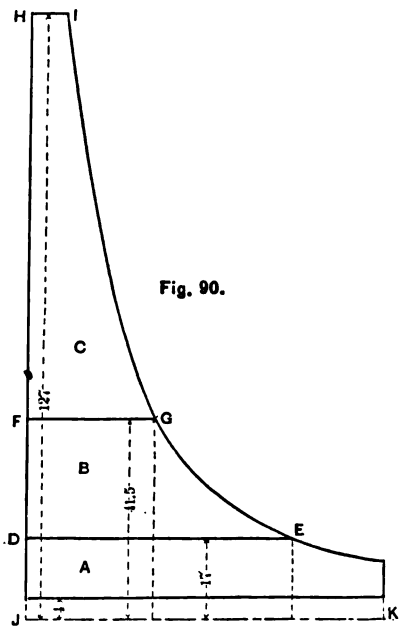

Fig. 90.

As in § 51, draw a card for a single cylinder developing all the work, Fig. 90. Then divide the diagram, by the lines *DE* and *FG*, into three equal areas, *A*, *B*, and *C*.

The mean pressure in *A*, *B*, and *C* being measured, the area of the pistons will be found as follows:

$$\text{Area of small piston} = \frac{33000 \times \frac{\text{I. H. P.}}{3}}{p_c \times 2R \times S}, \quad \ldots\ldots \quad (1)$$

where p_c = mean unbalanced pressure of card *C*, in pounds per square inch;

R = number of revolutions of the double-acting engine per minute;

S = stroke of piston in feet.

Area of intermediate piston

$$= \text{area of small piston} + \frac{33000 \times \frac{\text{I. H. P.}}{3}}{p_c' \times 2R \times S},$$

where p_c' = mean unbalanced pressure of the card *B*.

Digitized by Google

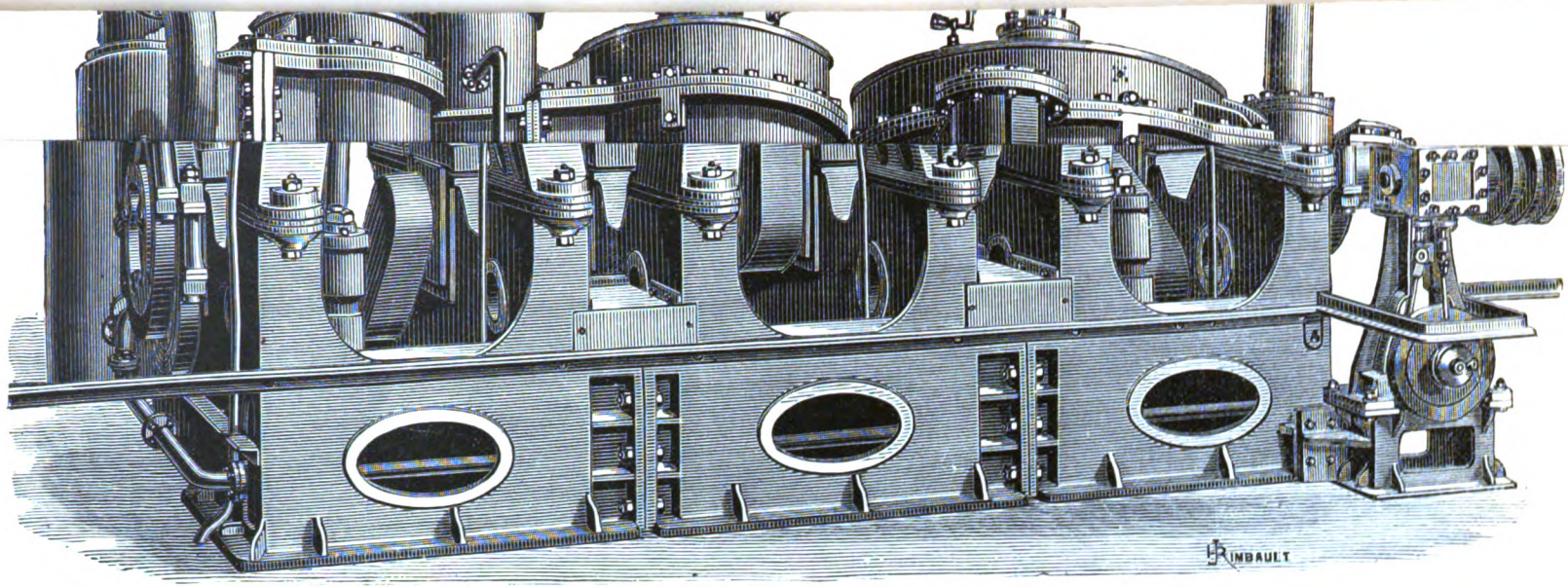

Fig. 91.

To face page 156.

TRIPLE-EXPANSION ENGINE OF SS. *Aberdeen.*

Digitized by Google

Digitized by Google

Area of the large piston

$$= \text{area of intermediate piston} + \frac{33000 \times \frac{\text{I. H. P.}}{3}}{p_e'' \times 2R \times S},$$

where p_e'' = mean unbalanced pressure of A.

56. Triple-expansion Engine. (*Analytical Method.*)—From the table at the end of § 50 we see that the usual practice in designing triple-expansion engines is to increase the cylinder ratios as the steam-pressure is increased. This is shown as follows: (See *Note* at end of chapter.)

Pressures	125	135	145	155	165
Ratio of large to small pistons	5	5.4	5.8	6.2	6.6

We will assume * that the absolute pressure of steam is 127 lbs., back pressure in the large cylinder 4 lbs., ratio of expansion 10, stroke 4 feet, revolutions per minute 70, I. H. P. 2100.

The mean effective pressure, if all the work is done in a single cylinder, is

$$127\left(\frac{1 + \log_e 10}{10}\right) - 4 = 37.91 \text{ lbs.}$$

Suppose the cut-off in the small cylinder is at 0.6 stroke, then, to effect a ratio of expansion of 10, the ratio of the large to the small cylinder must, from § 54, be 6. We will take the ratio of the intermediate to the high-pressure piston as $\frac{3}{2}$, and the ratio of the large to the intermediate as $(6 \times \frac{2}{3} =) 4$. The mean total driving pressure in the small cylinder is, since $\frac{1}{0.6} = 1\frac{2}{3}$ is the ratio of expansion,

$$127\left(\frac{1 + \log_e 1\frac{2}{3}}{1\frac{2}{3}}\right) = 115.22 \text{ lbs.}$$

Calling the back pressure on the small and the initial pressure on the intermediate piston 50 lbs. per sq. in., the mean unbalanced pressure on the small piston is $(115.22 - 50 =)$ 65.22 lbs.

* Seaton's *Manual of Marine Engineering*, p. 83.

Digitized by Google

The ratio of expansion of the intermediate cylinder is $\frac{1}{0.6} = 1\frac{2}{3}$, since the ratio of intermediate to small cylinder is $\frac{5}{2}$, and the mean driving pressure is

$$50\left(\frac{1 + \log_e 1\frac{2}{3}}{1\frac{2}{3}}\right) = 45.36 \text{ lbs.}$$

Calling the back pressure in the intermediate and the initial pressure in the large cylinder 21 lbs., the mean unbalanced pressure on the intermediate piston is (45.36 − 21 =) 24.36 lbs. per sq. in.

Similarly, the mean unbalanced pressure on the large piston is

$$21\left(\frac{1 + \log_e 1\frac{2}{3}}{1\frac{2}{3}}\right) - 4 = 15.05 \text{ lbs. per sq. in.}$$

Denoting by A the area of the large piston, $\frac{5}{12}A$ is that of the intermediate, and $\frac{A}{6}$ the small piston.

The unbalanced initial loads on the three pistons are:

Small, $(127 - 50)\frac{A}{6} = 12.83$ lbs.

Intermediate, $(50 - 21)\frac{5A}{12} = 12.1$ lbs.

Large, $(21 - 4)A = 17$ lbs.

The mean total effective load on all three pistons is

$$65.22\frac{A}{6} + 24.36 \times \frac{5A}{12} + 15.05\,A$$
$$= 10.87A + 10.15A + 15.05A = 36.07A.$$

The efficiency of this system is

$$\frac{36.07}{37.91} = 0.9515.$$

Digitized by Google

There is a loss of (37.91 − 36.07 =) 1.84 lbs. due to "drop" between the cylinders.

The horse-power developed in the three cylinders will be in the ratio of

$$10.87 : 10.15 : 15.05,$$

or,

$$0.3014 : 0.2813 : 0.4173.$$

The power developed in the large cylinder is 2100×0.4173. The area of the large piston is

$$\frac{33000 \times 2100 \times 0.4173}{2 \times 70 \times 4 \times 15.05} = 3431.2 \text{ sq. in.}$$

The area of the intermediate piston is

$$\tfrac{5}{12} \times 3431.2 = 1429.7 \text{ sq. in.}$$

The area of the small piston is

$$\tfrac{1}{6} \times 3431.2 = 571.9 \text{ sq. in.}$$

The corresponding diameters are, in inches,

$$66\tfrac{1}{8}, \quad 42\tfrac{5}{8}, \quad 27.$$

The "drop" from the small cylinder, since its terminal pressure is $\frac{127 \times 0.6}{1} = 76.2$, is (76.2 − 50 =) 26.2 lbs. The "drop" from the intermediate cylinder, since its terminal pressure is $\frac{50 \times 0.6}{1} = 30$, is (30 − 21 =) 9 lbs.

The strains on the moving parts are moderate, and the mean and initial loads on the pistons are fairly well proportioned. This engine is an economical motor.

The consumption of fuel at sea varies from 1.5 to 1.6 lbs. per I. H. P. per hour, while as low a duty as 1.28 lbs. is said to have been obtained. The cylinders may be arranged in almost any manner. The following ways have been adopted in practice:

Digitized by Google

1. Cylinders side by side, connected to separate cranks.

2. The small and intermediate cylinders arranged tandem fashion, connected to one crank, and the large cylinder connected to another.

3. The large cylinder separated into two equivalent cylinders, which are hitched, tandem fashion, under the small and intermediate cylinders respectively.

Fig. 91* illustrates the first class of triple-expansion engines. The stroke of each piston is 4.5 ft., while the diameters are 30, 45, and 70 inches, respectively. The cranks are 120° apart. The illustration is the engines of the SS. *Aberdeen*, of 1800 I. H. P.

The engines of the SS. *Arabian* are illustrated in Fig. 92.† There are two high-pressure cylinders, each 9 inches in diameter, placed, tandem fashion, over the intermediate and low-pressure cylinders respectively. The intermediate cylinder is 18 inches and the condensing cylinder 32 inches in diameter.

NOTE.—Since the foregoing was written the author has prepared a paper for the spring meeting of the *Am. Soc. of Mech. Engrs.* in 1889, in which the practice of the past two years, as shown in a table of data relative to *eighty* triple-expansion engines, is to expand the steam to a terminal pressure of about 10 pounds absolute, with a piston speed of from 750 to 1000 feet per minute. The cylinder ratios used are:

Boiler-pressure (Gauge).	Cylinder Ratios.		
	Small.	Intermediate.	Large.
130	1	2.25	5.00
140	1	2.40	5.85
150	1	2.55	6.90
160	1	2.70	7.25
170 and upwards....quadruple the engine.			

* From *Engineering*, May 26, 1882.

† From *Engineering*, July 25, 1884.

Digitized by Google

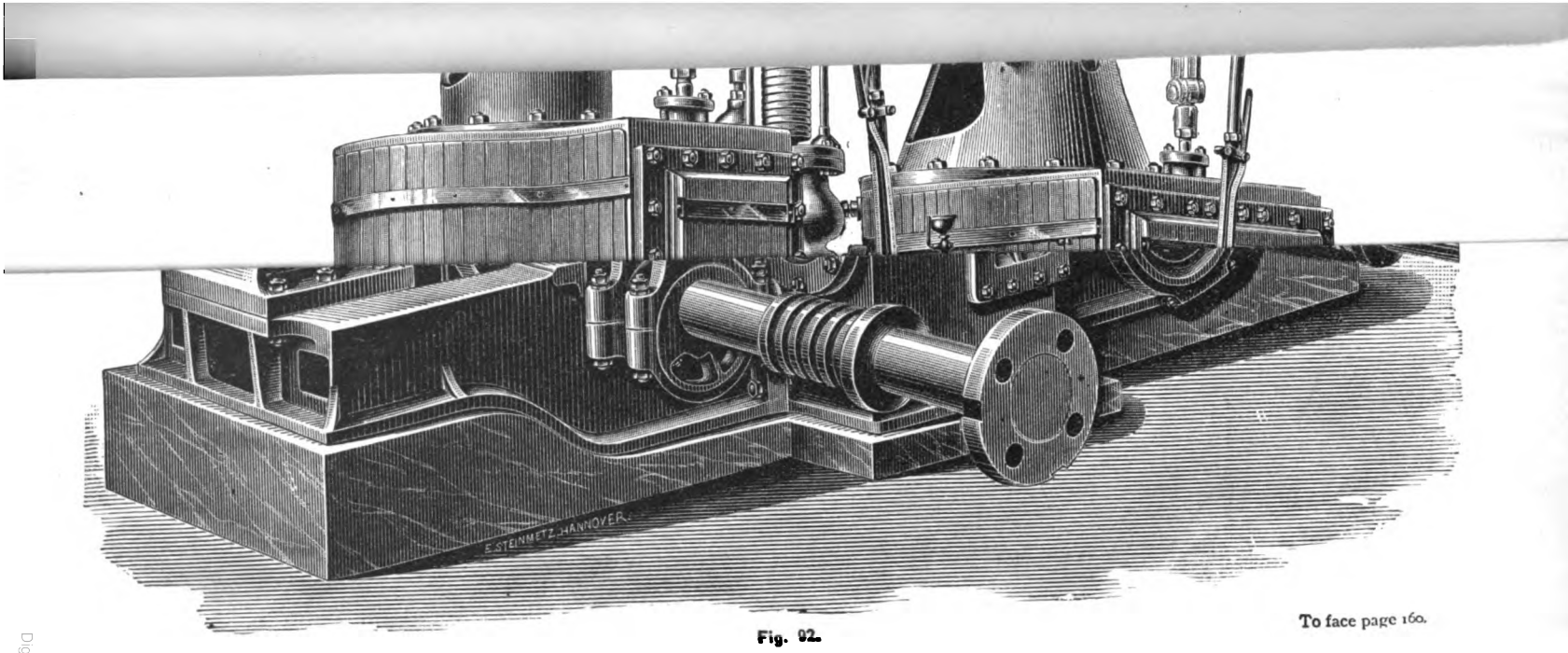

To face page 160.

Fig. 82.

TRIPLE-EXPANSION ENGINE OF SS. *Arabian.*

Digitized by Google

Digitized by Google

CHAPTER VI.

THEORETICAL INDICATOR-DIAGRAMS OF A COMPOUND ENGINE.

57. Notation.—Having designed the cylinder dimensions, we can now draw the theoretical indicator-diagrams, and ascertain if the proportions are in accord, so as to produce maximum economical results. The angularity of the connecting-rod is neglected in this discussion. The steam is assumed to expand isothermally.

Let A = area of the high-pressure piston;
B = area of the low-pressure piston;
C = volume of the receiver, if one is used;
L = length of stroke of the pistons;
L_h = length of stroke of the high-pressure piston already completed;
L_l = length of stroke of the low-pressure piston already completed;
x_h = length of stroke of the high-pressure piston completed when steam is cut off;
x_l = length of stroke of the low-pressure piston completed when steam is cut off;
x_h' = length of stroke of the high-pressure piston completed when exhaust closes;
c_h = clearance volume of the high-pressure cylinder in terms of stroke;
c_l = clearance volume of the low-pressure cylinder in terms of stroke;
p_1 = initial absolute pressure of steam on high-pressure piston;
p_2 = terminal absolute pressure of steam on high-pressure piston;

Digitized by Google

p_c = absolute pressure of steam in the receiver;
p_1' = initial absolute pressure of steam on low-pressure piston;
p_2' = terminal absolute pressure of steam on low-pressure piston;
R = total ratio of expansion of steam;
r_h = absolute ratio of expansion of steam in the high-pressure cylinder;
r_l = absolute ratio of expansion of steam in the low-pressure cylinder.

Since methods used in finding the theoretical indicator-diagrams for the various types of engines are similar, we will give but two illustrative examples.

58. Continuous-expansion Compound-engines following Full Stroke in the Low-pressure Cylinder. See Example in § 60.—The driving pressure on the high-pressure piston for the stroke L_h already completed is

$$\frac{p_1(x_h + c_h)}{c_h + L_h} \quad \ldots\ldots\ldots \quad (1)$$

The terminal driving pressure on the high-pressure piston is

$$p_2 = \frac{p_1(x_h + c_h)}{c_h + L} \quad \ldots\ldots\ldots \quad (2)$$

Pressure on the low-pressure piston at the end of its stroke, and in the passage leading to this cylinder just before the high pressure cylinder exhausts, is

$$p_2' = \frac{p_1}{R} = \frac{p_1(x_h + c_h)}{(L + c_h)\frac{B}{A}} \quad \ldots\ldots\ldots \quad (3)$$

Back pressure in the high-pressure cylinder and initial pressure of steam on the low-pressure piston is

$$p_1' = p_c = \frac{p_1(x_h + c_h)A + p_2' C}{(L + c_h)A + C + c_l B} \quad \ldots\ldots \quad (4)$$

Digitized by Google

The drop is the difference between equations (2) and (4), and is due to the free expansion of steam. In case there is no receiver, $C = 0$.

The pressure at any part, L_l, of the stroke of the low-pressure piston before the exhaust from the high-pressure cylinder is cut off is

$$p_l = \frac{p_1(x_h + c_h)A + p_2'C}{C + (L_l + c_l)B + (L + c_h - L_l)A} \quad . \quad . \quad . \quad . \quad (5)$$

Terminal pressure in the low-pressure cylinder when the high-pressure exhaust closes before the end of the stroke is

$$\frac{p_1(x_h + c_h)A + p_2'C - p_l(L + c_h - x_h')A}{C + (L + c_l)B} \quad . \quad . \quad . \quad . \quad (6)$$

The terminal pressure in the low-pressure cylinder is less by formula (6) than by (3). In designing, use (3) until x_h' is determined upon, and then correct (3) by (6).

59. Receiver Compound-engines, Cranks at 90°. See Example in § 61.—Here it is necessary to take into account the pressure in the receiver, p_c, at the instant the exhaust begins from the high-pressure cylinder. This is, neglecting angularity of the connecting-rod, equal to the pressure in the low-pressure cylinder at the instant its steam-port is closed. The value of p_c greatly affects the back pressure in the high-pressure and the initial pressure in the low-pressure cylinder. The driving pressures for the high-pressure piston are computed from formulæ (1) and (2) of § 58.

Pressure in the low-pressure cylinder at half-stroke, for a cut-off at half-stroke, is

$$p_c = \frac{p_1(x_h + c_h)A}{(\frac{1}{2}L + c_l)B} \text{ (approximately)}. \quad . \quad . \quad . \quad (7)$$

Equation (7) becomes, when the clearance spaces in both cylinders are filled, by compression, with steam of the initial tensions,

$$p_c' = \frac{p_1 x_h A}{\frac{1}{2}BL} \text{ (approximately)}. \quad . \quad . \quad . \quad . \quad . \quad . \quad (8)$$

Digitized by Google

After the high-pressure exhaust-port is opened, the pressure in the receiver and the back pressure in the high-pressure cylinder is

$$p_2 = p_2' = p_1 = \frac{p_1(x_h + c_h)A + p_gC}{(L + c_h)A + C} \quad \ldots\ldots\ldots \quad (9)$$

Pressure in the low-pressure cylinder at commencement of stroke and back pressure in the high-pressure cylinder at mid-stroke is

$$p_1' = \frac{p_1(x_h + c_h)A + p_gC}{(\tfrac{1}{2}L + c_h)A + C} \quad \ldots\ldots \quad (10)$$

Equation (10) is true when the clearance space in the low-pressure cylinder is filled, by compression, with steam of a tension p_1': in case it is not, and the tension is p_x, equation (10) becomes

$$p_1' = \frac{p_1(x_h + c_h)A + p_gC + p_xc_lB}{(\tfrac{1}{2}L + c_h)A + C + c_lB} \quad \ldots\ldots \quad (11)$$

The pressure in the low-pressure cylinder, and on the back of the high-pressure piston at the instant before the closure of the high-pressure exhaust-port (when x_h' = part of stroke of the high-pressure piston completed as the exhaust closes and x_l' = corresponding movement of the low-pressure piston from position at mid-stroke), is

$$p_h = \frac{p_1(x_h + c_h)A + p_gC}{(x_h' + c_h)A + C + (\tfrac{1}{2}L - x_l')B} \quad \ldots \quad (12)$$

Pressure at mid-stroke of low-pressure piston, before the low-pressure admission is cut off, is

$$\frac{p_1(x_h + c_h)A + p_gC - p_h(x_h' + c_h)A}{B(\tfrac{1}{2}L + c_l) + C} \quad \ldots \quad (13)$$

Pressure at end of stroke in low-pressure cylinder is

$$\frac{p_1(x_h + c_h)A + p_gC - p_h(x_h' + c_h)A}{B(L + c_l)} = \frac{p_1}{R} \quad \ldots \quad (14)$$

Digitized by Google

60. Example on § 58. (Fig. 93.)—Given the ratio of cylinders = 3; clearance volume in each cylinder = $\frac{1}{10}$ of stroke displacement; initial absolute pressure of steam = 90 lbs.; back pressure in low-pressure cylinder = 4 lbs.; steam cut off at one-fourth stroke in the high-pressure and following full stroke in the low-pressure cylinder; exhaust closes at end of stroke in each cylinder; and cranks 180° apart. Draw the theoretical indicator-diagrams from both cylinders, and show by dotted lines the effects produced by closing the exhaust-port in each cylinder when three fourths of the strokes have been completed.

Terminal pressure in the high-pressure cylinder is

$$90\left(\frac{0.25 + 0.1}{1.1}\right) = 28.6 \text{ lbs.}$$

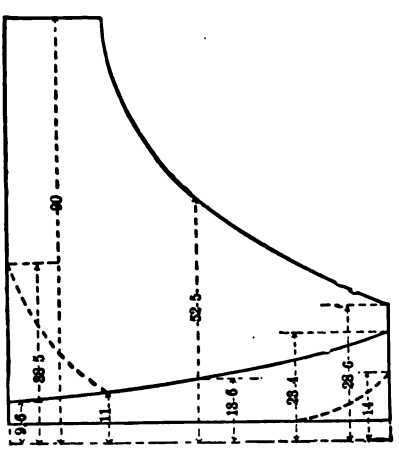

Fig. 93.

Pressure at mid-stroke is

$$90 \cdot \frac{0.1 + 0.25}{0.1 + 0.5} = 52.5 \text{ lbs.}$$

Digitized by Google

Initial pressure in low-pressure cylinder is

$$\frac{90(0.25 + 0.1) \times 1 + 4(0.1 \times 3)}{1.1 \times 1 + 0.1 \times 3} = 23.36 \text{ lbs.}$$

Pressure at mid-stroke is

$$\frac{90(0.25 + 0.1) \times 1 + (0.1 \times 3) \times 4}{(0.5 + 0.1) \times 1 + (0.1 + 0.5) \times 3} = 13.62 \text{ lbs.}$$

Terminal pressure in low-pressure cylinder is

$$\frac{90(0.25 + 0.1) \times 1 + (0.1 \times 3) \times 4}{0.1 \times 1 + 1.1 \times 3} = 9.62.$$

Total ratio of expansion is $\frac{90}{9.62} = 9.35$.

61. Example on § 59. (Fig. 94)—Given the cylinder ratio = 3; volume of receiver equals volume of the high-pressure cylinder; clearance $\frac{1}{10}$ of stroke displacement in each cylinder; cranks at 90°; high-pressure cuts off at one-third and low pressure at one-half stroke; $p_1 = 90$ lbs.; construct the theoretical indicator-cards.

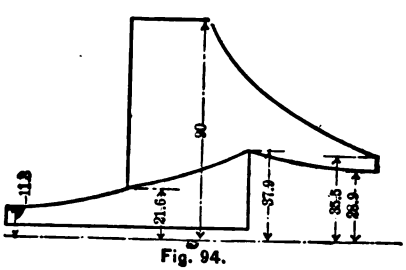

Fig. 94.

The terminal pressure in the high-pressure cylinder

$$= \frac{90(0.33 + 0.1)}{1 + 0.1} = 35.5 \text{ lbs.}$$

Digitized by Google

Pressure at mid-stroke in the low-pressure cylinder

$$= \frac{90(0.33 + 0.1) \times 1}{(0.5 + 0.1) \times 3} = 21.66 \text{ lbs. (Eq. 7 of § 59).}$$

Receiver pressure at end of stroke of the small piston

$$= \frac{90(0.33 + 0.1) \times 1 + 21.66 \times 1}{(1 + 0.1) \times 1 + 1} = 28.9 \text{ lbs. (Eq. 9).}$$

Initial pressure in large cylinder

$$= \frac{90(0.33 + 0.1) \times 1 + 21.66 \times 1}{(0.5 + 0.1) \times 1 + 1} = 37.9 \text{ lbs. (Eq. 10).}$$

Terminal pressure in low-pressure is

$$= \frac{(0.5 + 0.1) \times 21.66}{0.1 + 1} = 11.8 \text{ lbs.}$$

Digitized by Google

CHAPTER VII.

CRANK-EFFORT DIAGRAMS, ILLUSTRATING THE INFLUENCE OF THE RECIPROCATING AND ROTATIVE PARTS OF AN ENGINE.

62. Meaning of Crank-effort.—Given the pressure, P, on the piston for any crank position, as OE in Fig. 95, find the crank-effort or tangential force P' at that position.

By the principle of virtual velocities,

$P : P'$ :: velocity of the crank-pin : velocity of the piston.

If we denote the length of the crank by r, the distance travelled by the crank-pin in moving through the angle θ is $r\theta$, and the corresponding distance travelled by the piston is r versin θ (when we neglect angularity of the connecting-rod).

The velocity ratio is

$$\text{Velocity of}\frac{\text{crank-pin}}{\text{piston}} = \frac{rd\theta}{rd(\text{versin }\theta)} = \frac{rd\theta}{r\sin\theta d\theta} = \frac{1}{\sin\theta}.$$

Hence $$\frac{P'}{P} = \sin\theta, \quad P' = P\sin\theta.$$

The value of P' may be computed for various values of θ, and, being tabulated, will show the fluctuations of the turning power of the crank.

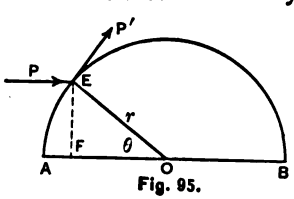

Fig. 95.

It is generally, however, more convenient to find the crank effort by graphic methods, and then lay down the values found as ordinates of a curve, the abscissæ of which represent the corresponding crank angles. Thus is presented to the eye, at a glance, the fluctuations of the tangential force;

Digitized by Google

and by finding and measuring the maximum ordinate of the curve, we have the greatest value of the crank-effort.

63. Crank-effort for Uniform Piston-pressure, Neglecting the Angularity of the Connecting-rod.—When we neglect the angularity of the connecting-rod, the effort on the piston will be transmitted to the crank-pin in a direction parallel to AB, the axis of the cylinder. We will suppose $abcd$ in Fig. 96 to represent the indicator-diagram of uniform piston-pressures. Draw a line AB parallel to ab, and project the latter

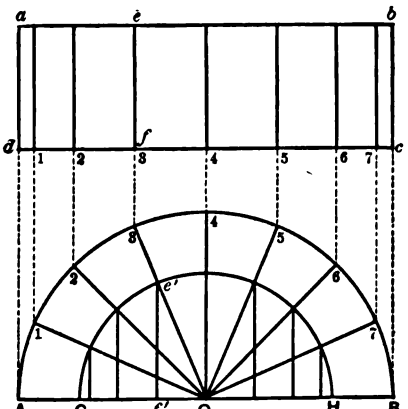

Fig. 96.

upon it. On AB describe a semicircle to represent the orbit of the crank-pin for one stroke. Draw radii $O1$, $O2$, $O3$, etc., at equal angular distances, to represent successive crank positions. Describe the circle OG with a radius equal to ad, which is the constant pressure on the piston. Through the points of intersection of this semi-circumrefence and the radial lines erect perpendiculars to the base-line AB. These perpendiculars will represent the tangential forces at the various crank positions. Thus, $\frac{P}{P'} = \frac{Oe'}{e'f'} = \frac{1}{\sin \theta}$, as required in § 62.

On an axis of abscissæ AB, Fig. 97, lay off equal distances to represent crank angles, and lay off the corresponding ordinates as $e''f''$, equal to the graphic values of the crank effort

Digitized by Google

found in Fig. 96. Drawing a curve through the points found, we have a graphic representation of the turning force for one stroke of the piston. The curve of crank efforts for the other stroke will in this case be the same as in Fig. 97

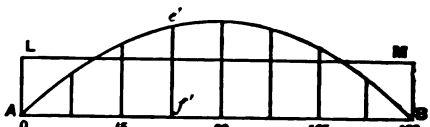

Fig. 97.

If AB is laid off equal to πab (Fig. 96), the area included between the curve and AB will be equal to the area $abcd$, or the power exerted by the engine during one stroke. If we draw a line LM parallel to AB, its ordinate being

$$\frac{2 \times ad}{\pi},$$

it will represent the mean crank-effort. Also, if the resistance opposed to the motive-power of the engine is constant, the

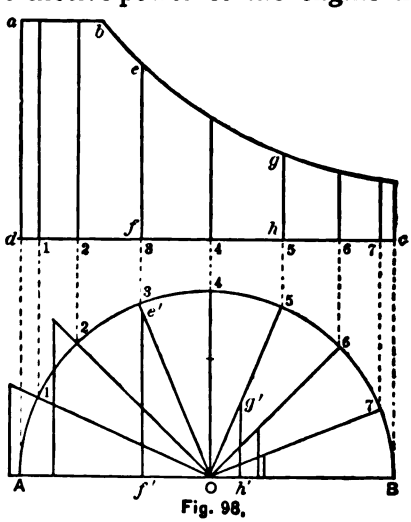

Fig. 98.

fly-wheel and other heavy moving parts will be performing work as long as the curve remains below LM, and will be storing up energy when the curve rises above LM.

Digitized by Google

64. Crank-effort for a Varying Piston-pressure, Neglecting the Angularity of the Connecting-rod.—Let *abcd* in Fig. 98 represent the diagram of piston-pressures. Draw the crank orbit, radii, and ordinates, as before. On each radius, as $O3$, lay off the corresponding ordinate of the diagram, as $Oe' = ef$, and through the points found erect perpendiculars to AB, which will represent crank-efforts, as before. Thus at crank position $O5$ the pressure of the piston is gh, and the crank-effort is $g'h'$. These values being plotted as before, give the curve shown in Fig. 99. By drawing a horizontal tangent,

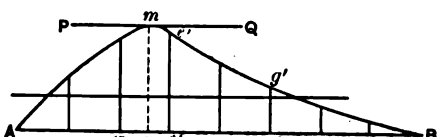

Fig. 99.

PQ, and measuring its distance, mn, from AB, we will find the maximum crank-effort. If we have the pressure-diagram for the return stroke, we can complete the curve to show the crank-effort for one entire revolution (see Fig. 106).

65. Crank-effort for a Varying Piston-pressure, Considering the Angularity of the Connecting-rod.*—In Fig.

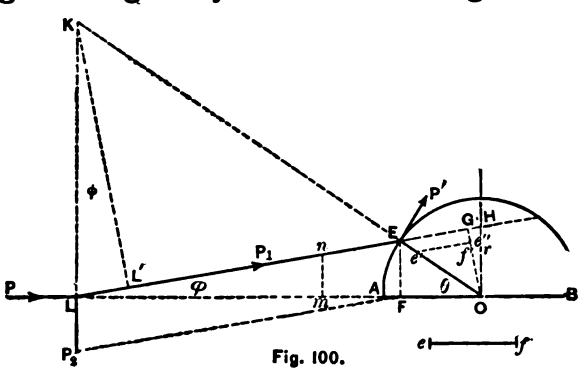

Fig. 100.

100 take any crank position OE, and draw EL, the connecting-rod. At L erect a perpendicular to the path of the piston, and prolong the line of the crank until it intersects the per-

* See § 136, Appendix, for further discussion of this subject.

Digitized by Google

pendicular at K, which is the instantaneous axis of rotation. For this position of the crank

$$\text{The velocity of the } \frac{\text{piston}}{\text{crank-pin}} = \frac{KL}{KE}.$$

But the pressure on the piston is resolved into two forces, one acting in the direction of LP, and producing friction at the cross-head, and the other acting along the connecting-rod, and greater than P in the ratio $\frac{LE}{LF}$. Now the pressure $\frac{P \times LE}{LF}$ acting with a velocity equal to the velocity of the crank-pin $\times \frac{KL}{KE}$ is equivalent to the original pressure P, acting with a velocity less than the above in the ratio $\frac{LF}{LE}$.

To find the effective velocity of P, lay off the angle $LKL' = \phi$. Then we have KL' perpendicular to the connecting-rod. Also,

$$\frac{\text{Effective velocity of the piston}}{\text{Velocity of the crank}} = \frac{KL'}{KE}.$$

Drawing OG parallel to KL', or perpendicular to the connecting-rod produced, we have

$$KL' : OG :: KE : OE.$$

Therefore the velocities above are in the ratio $\frac{OG}{OE}$, and

$$P' = P \times \frac{OE}{OG}.$$

Let ef be a measure of the *effective* pressure on the piston at the assumed crank position; lay this off on OE, as Oe', and draw $e'e''$ parallel to EG: *then will Oe'' be the tangential force.*

The greatest ratio $\frac{P'}{P}$ will evidently be at the point where the line of the connecting-rod is tangent to the crank orbit. *In*

Digitized by Google

finding the tangential forces at the various crank positions, it is not necessary to find the instantaneous axis as above, but simply to *draw the lines of crank and connecting-rod, and let fall from the centre of the shaft the perpendiculars upon the line of the connecting-rod, and lay off the pressures as shown.*

In measuring the effective pressure from the indicator-diagrams, the length of that part of each ordinate which is included between the forward-pressure line of the card from one end of the cylinder and the back-pressure line of the card from the other end of the cylinder is to be taken. Thus, having a pair of cards *abcd* and *a'b'c'd'*, Fig. 101, the diagram of effective pressure for the upper end of the cylinder is the part cross-

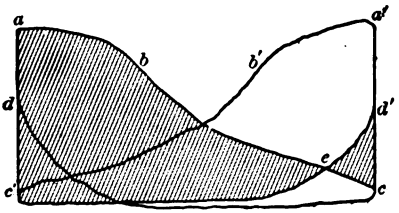

Fig. 101.

hatched. The larger part indicates an excess of forward pressures, while the small part *ecd'* indicates negative pressures, or an excess of back pressures. Pressures measured within the limits *ec* will be plotted *below* the axis of abscissæ in Fig. 99, showing a negative rotative-force.

66. Influence of the Inertia of the Reciprocating Parts when the Angularity of the Connecting-rod is Neglected.—With high piston speeds the effect of the inertia of the reciprocating parts of the engine (reducing the crank-effort while the velocity is being accelerated, and increasing it while the velocity is being retarded) must be considered. We will first assume the connecting-rod to be infinite in length.

Let v = the linear velocity in feet per second of the crank-pin, assumed to be constant;

x = the distance travelled by the piston from the beginning of its stroke in feet;

Digitized by Google

r = the length of the crank in feet;
θ = the angle swept through by the crank while the piston moves through x;
R = number of revolutions of the engine per minute;
A = area of the piston in square inches;
W = weight of the reciprocating parts in pounds;
g = acceleration due to gravity = 32.2 ft. per sec.;
M = mass of the reciprocating parts = $\frac{W}{g}$;
v_x = rate of increase of x in ft. per sec.;
a_x = acceleration of x, or the velocity of v_x, in ft. per sec.;
F = force producing this acceleration.

Referring to Fig. 95, the distance travelled by the piston $= AF = x = r$ versin θ.

By calculus,

$$v_x = \frac{dx}{dt} = \frac{r \sin \theta d\theta}{dt}.$$

But $r\theta = vt$; therefore

$$d\theta = \frac{v}{r} dt,$$

and

$$v_x = \frac{r \frac{v}{r} \sin \theta dt}{dt} = v \sin \theta.$$

Also,

$$a_x = \frac{dv_x}{dt} = \frac{v \cos \theta d\theta}{dt} = \frac{v^2}{r} \cos \theta.$$

The force required to produce this acceleration is

$$F = \text{mass} \times \text{acceleration} = M \frac{v^2}{r} \cos \theta.$$

Since the expression for centrifugal force is $\frac{Mv^2}{r}$, we see that F is the horizontal component of the centrifugal force of a

Digitized by Google

mass, M, concentrated at the crank-pin. In the second quadrant the cosine is — and F is negative, showing a retarding force.

The value of F may be made more useful by substituting $M = \frac{W}{g}$ and $v = \frac{2\pi rR}{60}$, when it becomes

$$F = \frac{W}{gr}\left(\frac{2\pi rR}{60}\right)^2 \cos\theta = 0.00034 WR^2 r \cos\theta.$$

The pressure per square inch of piston area which will produce the acceleration is

$$\frac{0.00034 WR^2 r \cos\theta}{A}.$$

After calculating the pressure required when the engine is on its centres, i.e., when $\cos\theta = \pm 1$, we may find other values by construction, as shown in Fig. 102. Describe a semi-circumference whose radius represents, to the same scale of pressures as the indicator-card, the pressure per square inch of piston required to overcome the centrifugal force of the reciprocating parts concentrated in the crank-pin. Then the pressure required to accelerate the reciprocating parts of any crank position, as OE, will be EF. Plotting these pressures as ordinates, in Fig. 103, the abscissæ representing corresponding piston positions (to the scale of AB = stroke), we see that each abscissæ and each ordinate equals $\cos\theta$. Hence the locus of the points is a straight line passing through O, making an angle of 45° with the axes. If now we extend or contract AB to agree with the length of the indica-

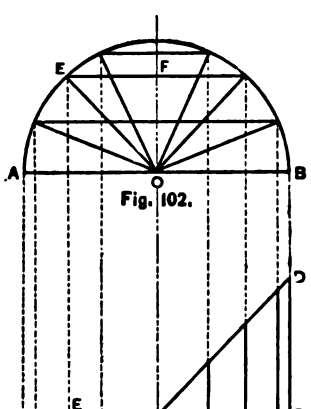

Fig. 102.

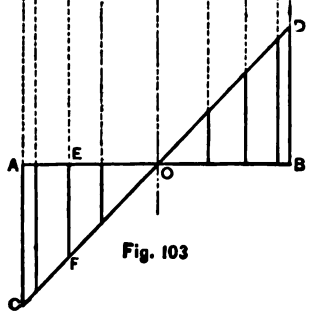

Fig. 103

Digitized by Google

tor-card, all the abscissæ will be increased or decreased in proportion, and CD will still be a straight line.

It is only necessary to find the value of F for $\cos \theta = 1$, and lay it off as an ordinate at the beginning of the stroke, and through the extremity of the ordinate and the middle of AB draw a straight line. Thus in Fig. 104, taking the effec-

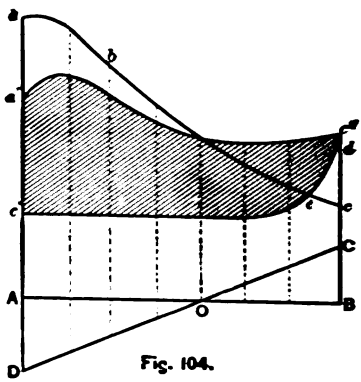

Fig. 104.

tive diagram $abcd'c'c'a$ in Fig. 101, we lay off AB equal to the length of the diagram, and AD equal to $\frac{F}{A}$; then draw DC through the centre, O, of AB. We have the subtractive area AOD and the additive area BOC. Drawing the ordinates of both diagrams and combining them, we get for the resulting pressure line $a''c''$, and the corrected effective diagram will be the hatched area.

67. Influence of the Reciprocating Parts when the Angularity of the Connecting-rod is Considered.—The calculation of the effect of the inertia of the reciprocating parts in the preceding article is sufficiently accurate with long connecting-rods and low piston-speeds, but with short rods and high speeds the effect of this angularity must be considered.

In Fig. 105, let EL equal the length of connecting-rod. When the crank has arrived at OE, the piston, instead of only having reached F, will be at G.

Using the same notation as before, and, in addition, calling the length of the connecting-rod l, and the number of crank

Digitized by Google

positions taken in a semi-revolution as n, we have, by referring to Fig. 106,

$$x = r \text{ versin } \theta + l \text{ versin } \phi; \quad . \quad . \quad . \quad . \quad (1)$$

$$l \sin \phi = r \sin \theta, \text{ or } \phi = \sin^{-1}\left(\frac{r \sin \theta}{l}\right); \quad . \quad . \quad (2)$$

$$r\theta = vt, \text{ and } d\theta = \frac{v}{r} dt; \quad . \quad . \quad . \quad . \quad . \quad (3)$$

$$v_x = \frac{dx}{dt} = r \sin \theta \frac{d\theta}{dt} + l \sin \phi \frac{d\phi}{dt}. \quad . \quad . \quad (4)$$

Substituting the value of ϕ from (2) in (4), we have

$$v_x = \frac{dx}{dt} = r \sin \theta \frac{d\theta}{dt} \left\{ 1 + \frac{r \cos \theta}{\sqrt{l^2 - r^2 \sin^2 \theta}} \right\}. \quad . \quad . \quad (5)$$

Substituting the value of $d\theta$ from (3) in (5), we have

$$v_x = v \sin \theta \left\{ 1 + \frac{r \cos \theta}{\sqrt{l^2 - r^2 \sin^2 \theta}} \right\}. \quad . \quad . \quad . \quad . \quad (6)$$

The acceleration of the motion of the reciprocating parts will be

$$\alpha_x = \frac{dv_x}{dt} = \frac{v}{dt}\left[\sin \theta d \left\{ 1 + \frac{r \cos \theta}{\sqrt{l^2 - r^2 \sin^2 \theta}} \right\} + \left\{ 1 + \frac{r \cos \theta}{\sqrt{l^2 - r^2 \sin^2 \theta}} \right\} d(\sin \theta) \right]$$

$$= v \frac{d\theta}{dt}\left[\frac{-rl^2 \sin^2 \theta + r^3 \sin^4 \theta + r^3 \sin^2 \theta \cos^2 \theta}{(l^2 - r^2 \sin^2 \theta)^{\frac{3}{2}}} + \cos \theta + \frac{r \cos^2 \theta}{(l^2 - r^2 \sin^2 \theta)^{\frac{1}{2}}} \right].$$

Digitized by Google

Substituting the value of dt from (3),

$$a_x = \frac{v^2}{r}\left[\frac{-rl^2\sin^2\theta - r^3\sin^4\theta + r^3\sin^2\theta\cos^2\theta}{(l^2 - r^2\sin^2\theta)^{\frac{3}{2}}}\right.$$

$$\left. + \cos\theta - \frac{r\cos^2\theta}{(l^2 - r^2\sin^2\theta)^{\frac{1}{2}}}\right]$$

When the engine is on a dead-centre, $\sin\theta = 0$ and $\cos\theta = \pm 1$, and (7) becomes

$$a_x = \frac{v^2}{r}\left(\pm 1 + \frac{r}{l}\right). \quad . \quad . \quad . \quad . \quad . \quad . \quad . \quad (8)$$

Let $a = \frac{l}{r}$; then (8) becomes for the beginning of the *outward* stroke

$$a_x = \frac{v^2}{r} \cdot \frac{a+1}{a}, \quad . \quad . \quad . \quad . \quad . \quad . \quad . \quad (9)$$

or equal to the acceleration of the centrifugal force of a body moving with a velocity v and a radius r, increasing in the ratio $\frac{a+1}{a}$. Also, for the beginning of the *inward* stroke,

$$a_x = \frac{v^2}{r} \cdot \frac{r-l}{l} = \frac{v^2}{r} \cdot \frac{1-a}{a} = -\frac{v^2}{r} \cdot \frac{a-1}{a}, \quad . \quad (10)$$

which shows that the motion is retarded with an acceleration equal to that of the centrifugal force decreased in the ratio $\frac{a-1}{a}$.

When the engine is on either half-centre, $\cos\theta = 0$, $\sin\theta = \pm 1$, and (7) becomes

$$a_x = \frac{v^2}{r}\left\{\frac{-rl^2 + r^3}{(l^2 - r^2)^{\frac{3}{2}}}\right\} = -v^2\left\{\frac{l^2 - r^2}{(l^2 - r^2)^{\frac{3}{2}}}\right\}$$

$$= -\frac{v^2}{(l^2 - r^2)^{\frac{1}{2}}} = -\frac{v^2}{r} \cdot \frac{1}{\sqrt{a^2 - 1}}. \quad . \quad . \quad . \quad . \quad (11)$$

Digitized by Google

The acceleration at any other positions of the crank may be found by substituting the proper values of sin θ and cos θ in (7). But it will, in practice, be found more convenient to find approximate values graphically, as shown in Fig. 105.

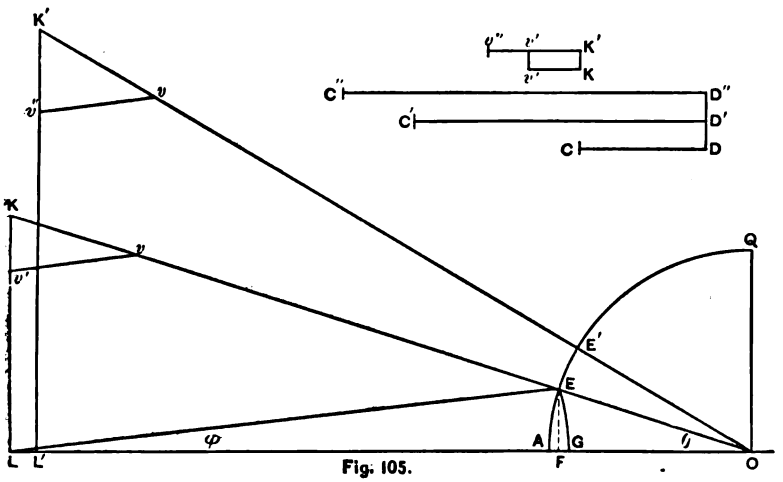

Fig. 105.

Suppose the crank orbit to be divided into $2n$ equal parts. Take any position as OE, and find the instantaneous axis K, as in Fig. 100. Then the velocity of the $\frac{\text{crank-pin}}{\text{piston}} = \frac{KE}{KL}$. Lay off, to any convenient scale, a line

$$CD = \frac{2\pi rR}{60} = \frac{\pi rR}{30},$$

to represent the linear velocity of the crank-pin in feet per second. Lay off this distance from K to v on KE, and draw vv' parallel to EL; then Kv' will be the velocity of the piston, v_x. Take another crank position, OE', and by a similar construction obtain $v_x = K'v''$. The difference between the two velocities is represented by the line $v'v''$ (shown at the top and right of Fig. 105), and it is the velocity added while the crank moves from E

Digitized by Google

to E', or Δv. The time required to pass from E to E', or Δt, is

$$\frac{\frac{\pi r}{n}}{\frac{2\pi rR}{60}} = \frac{30}{Rn}.$$

Then the mean acceleration, approximately, of the motion of the piston while the crank moves from OE to OE', or the velocity added in one second, is $\frac{\Delta v}{\Delta t}$. This we can find graphically by laying off on KE a distance

$$\frac{\frac{\pi rR}{30}}{\frac{30}{Rn}} = \frac{\pi rR^2 n}{900} = C'D',$$

which we will suppose equal to Kv' and $K'v''$ for the two positions of the crank under consideration. The difference between these lengths, or $v'v''$, will represent at once the acceleration, or $\frac{\Delta v}{\Delta t}$, to the same scale in which CD represents the velocity of the crank-pin.

The force required to produce this acceleration is mass multiplied by the acceleration, or $\frac{W'}{g}\alpha$, and the pressure per sq. inch of piston is $\frac{W'\alpha}{gA}$. Hence if we multiply $\frac{\Delta v}{\Delta t}$ by $\frac{W'}{gA}$ we will have the desired result. But this can be done graphically by laying off, in place of $C'D'$, a distance greater than $C'D'$ in the ratio $\frac{W}{gA}$, or

$$\frac{\pi rR^2 nW}{900gA} = \frac{0.0001084\,WrR^2 n}{A} = C''D''.$$

Now the difference between the new Kv' and $K'v''$ will represent, without further calculation, the pressure per square inch

Digitized by Google

of piston area required to accelerate the reciprocating parts while the crank moves from OE to OE'. In the same manner we find the pressure required at other crank positions.

In plotting the curve of accelerating forces the approximate mean values found should be marked off at crank positions midway between those used in finding Δv. The point of greatest piston speed is found by noting when the sign of the acceleration changes from + to −, or where the curve of acceleration crosses the axis of X, or by placing equation (7) equal to zero and solving for θ.

If, in the construction of Fig. 105, the instantaneous axis

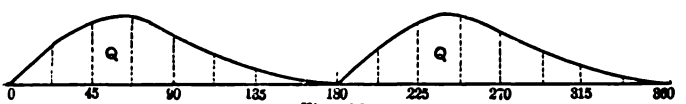

Fig. 106.

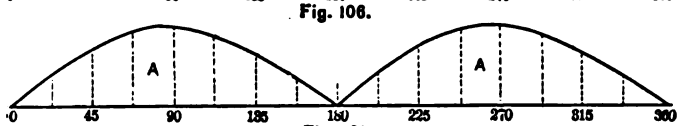

Fig. 107.

Fig. 108.

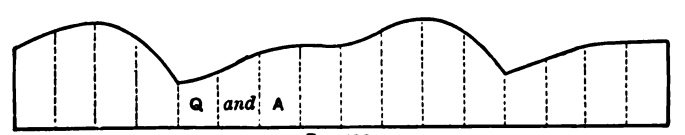

Fig 109.

K falls at too great a distance from the centre of the diagram, draw any lines parallel to the directions of the crank and perpendicular to the path of the piston, intersecting at some convenient point, and then proceed as before.

If an engine has more than one cylinder connected to the same crank, as Fig. 83, A, B, and C, or on cranks similarly placed, as Fig. 83, D, the ordinates of the diagrams of crank-effort must be added together in order to find the diagram of

Digitized by Google

combined effort. If the cranks are placed otherwise, say at 60° or 90°, the diagrams must first be placed in their proper relative positions, and then the ordinates added together. Suppose two cylinders to have their pistons connected to cranks

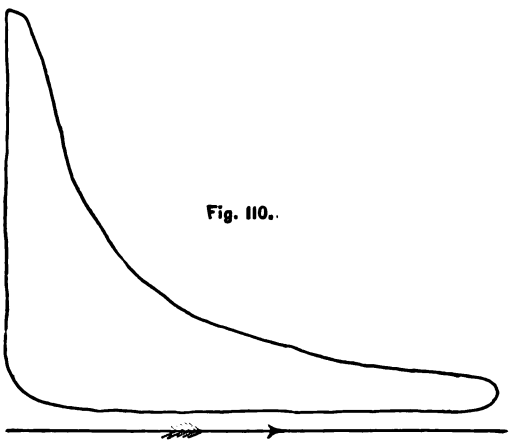

Fig. 110.

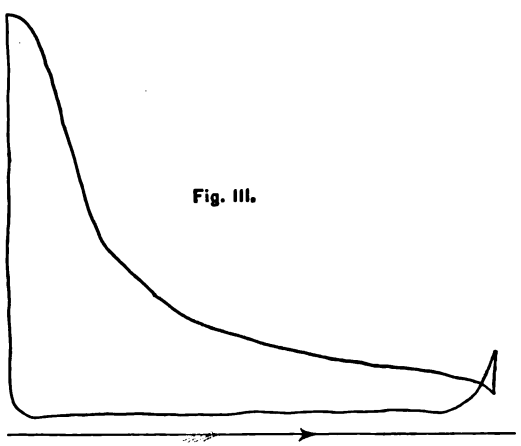

Fig. 111.

OQ and OA, 90° apart, Fig. 105, OQ being in advance, and let Fig. 106 be the diagram of crank-effort for an entire revolution of OQ, and Fig. 107 that of OA. We will first place the diagram of OA under that of OQ, as in Fig. 108. Then adding

Digitized by Google

together similarly placed ordinates of Figs. 108 and 106, we get the resulting curve of crank-effort shown in Fig. 109.

68. Illustration of the Effect of Reciprocating Parts.—Fig. 110 is an indicator-card, from an engine of 12 in. diameter of cylinder, 2 ft. stroke, 200 revolutions per minute, weight of the reciprocating parts is 470 lbs., and the connecting-rod is six times that of the stroke.

In Fig. 111 the vacuum and compression lines are reversed, so that the ordinates between the upper and lower lines give the true effective pressures at their respective parts.

In Fig. 112 the half crank-circle GH is drawn, and divided into eight equal parts. The corresponding positions of the connecting-rod are next drawn. We now prolong the crank-line OE, and erect a perpendicular to the path of the piston, intersecting OE at K. Upon KO, from K, is laid off, to the same scale as the indicator-card, the value of

$$\frac{0.0001084\,WrR^2n}{A} = Kv.$$

vv' is then drawn parallel to the corresponding line of the connecting-rod. Now as the velocity of the piston was zero when the crank was at OG, Kv' represents, approximately, the mean accelerating force between G and E. We now take a crank position OM, half-way between OG and OE, and lay off in Fig. 113, on the corresponding ordinate, $Mm = Kv'$. In a similar manner, in Fig. 112, we find $K'v''$, and laying off upon it the length Kv', we have $v'v''$, which is the mean accelerating force between E and F. This is laid off in Fig. 113 as Nn, etc.

We also calculate, by the formulæ deduced in the preceding article, the accelerating forces at the dead-centres, and plot them at Aa and Bb, Fig. 113, and through all the points found draw the curve $amn \ldots b$. All ordinates below AB are to be subtracted, and those above AB added to the pressures shown by the indicator, thus producing the final diagram shown in Fig. 114, which is now ready to be used in finding the curve of crank-effort.

Digitized by Google

Examining this figure, we find that there is a negative pressure at the beginning of the stroke, and that the piston must be dragged by the crank. At x the pressure becomes positive; at y, again negative; and at z, again positive, and increasing

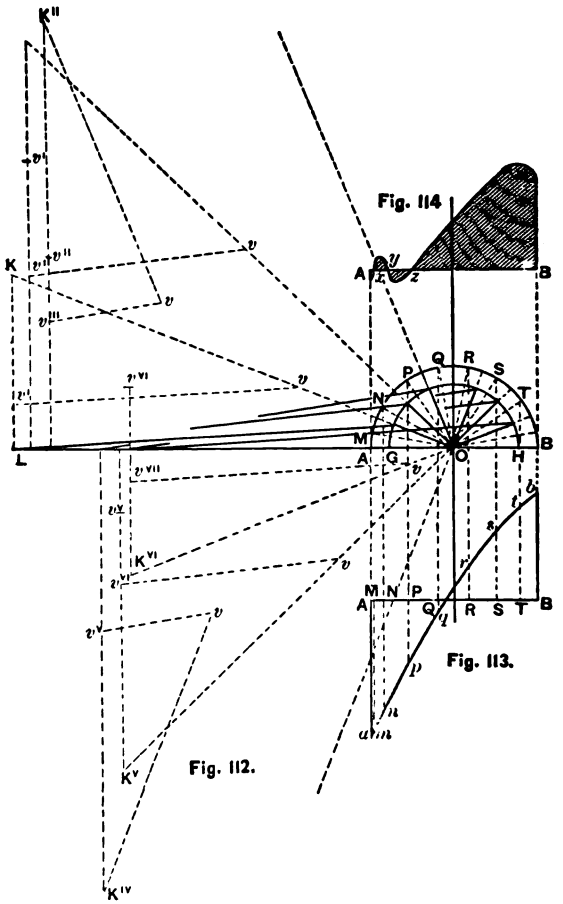

until just before the end of the stroke. It is evident that the diagram for the return stroke will be somewhat different from this, since the curve of accelerating forces, Fig. 113, must be taken in the inverse order. There will be more or less noise, occasioned by "back-lash," at each of the points x, y, and z.

Digitized by Google

There are three ways in which the piston force can be made more uniform, viz.: (1) by increasing the initial pressure of the steam, (2) by reducing the speed of piston, and (3) by reducing the weight of the reciprocating parts.

Cutting off the steam at a later point of the stroke will correct the negative pressure at y and z, but will not be of any assistance at the beginning of the stroke.

Digitized by Google

CHAPTER VIII.

FRICTION IN RELATION TO THE EFFICIENCY OF THE TURNING POWER OF THE STEAM-ENGINE.

69. Friction of the Piston and the Piston-rod Stuffing-box.—Another element entering into the problem of the efficiency of the turning power of a steam-engine, besides those discussed in Chapter VII, is friction. In badly designed engines the heat produced by friction may be a large fraction of the useful heat of the steam; and it is consequently of great importance to discover in what ways this loss can be decreased. In a non-condensing engine friction occurs as follows, viz.: Between the piston and the cylinder; between the piston-rod and its stuffing-box; between the cross-head and its guides; friction of the wrist-pin, crank-pin, and crank-shaft journals in their bearings; and friction of the valve-gear and pumps. To these, in a condensing engine driving its air and circulating pumps, is added the friction of the pumps.

Of these losses, the only ones which cannot be calculated to a close degree of approximation are those due to the piston and piston-rod friction. This friction depends upon the pressure between the bearing-surfaces, caused by setting out the packing, and is probably, in the majority of engines, much too great. There is no reliable record of experiments showing to what extent this loss may be reduced. In a horizontal engine there is friction in the cylinder due to the weight of the piston and rod, while this weight is transferred to the crank-pin and crank-shaft in the case of vertical engines. In the horizontal engine the weight of the piston is carried by about one fourth of the circumference of the packing-rings (see §§ 11, 12), and the pressure due to this weight is known to be greater than that necessary to keep the rings sufficiently pressed against

Digitized by Google

the cylinder to secure tightness. We may, then, safely assume that the mean pressure per unit of area of the packing-rings, for the entire circumference, should not exceed the pressure per unit of area on that part which carries the weight of the piston. Take, for example, the case of a horizontal marine engine of 60 in. diameter of cylinder and 4 ft. stroke. The area of the piston is 2827 sq. in. The thickness of the sides of the cellular piston would be 1 in., and the volume of the two sides of the piston equals ($2 \times 2827 =$) 5654 cu. in. The combined thickness of the rim and rings would be about 2.5 in. and their width 10 in., and the volume is ($2.5 \times 10 \times 60\pi =$) 4700 cu. in. There would be eight radial ribs, 1 in. thick and 10 in. deep, whose volume is ($8 \times 30 \times 10 =$) 2400 cu. in. The total volume is ($5654 + 4700 + 2400 =$) 12,754 cu. in., and, as cast-iron weighs about $\frac{1}{4}$ lb. per cu. in., the weight of the piston is $\left(\frac{12754}{4} =\right)$ 3190 lbs. The pressure against the whole circumference of the cylinder exerted by the piston is ($3190 \times 4 =$) 12,760 lbs. The coefficient of friction of metal surfaces in steam is, according to Tredgold, 0.08; therefore the friction of the above piston is ($12760 \times 0.08 =$) 1020 lbs.

To this piston friction must be added the friction of the piston-rod in its stuffing-box, the pressure in which, according to Rigg (see § 38), should not exceed 4 lbs. per sq. in. of rubbing-surface. The rod would be about 8 in. in diameter and the stuffing-box 12 in. deep, and on this assumption the friction of the rod is ($8\pi \times 12 \times 4 \times 0.08 =$) 96 lbs. The friction of the cylinder is then ($96 + 1020 =$) 1116 lbs., or $\left(\frac{1116}{2827} =\right)$ about 0.4 lb. per sq. in. of piston area, which should not be exceeded under any circumstances in a cylinder of this size.

70. Friction of the Cross-head Guides.—Calling P the total piston pressure in pounds (for any crank position), taken from the diagram already corrected for inertia, as explained in Chap. VII, and for the resistances described in § 69, we have (see Fig. 100) the resistance normal to the surface of the guides $= P \tan \phi$, and the amount of friction $= fP \tan \phi$.

Digitized by Google

[illegible]

or about [illegible] lb. for every pound pressure on the piston.

71. Friction of the Wrist-pin. Fig. 115.—Let P_1 = the

Fig. 115.

pressure remaining after correcting that on the piston, P, for the friction of the cross-head guides.

a = the radius of the wrist-pin in inches;
l = length of the connecting-rod.

Digitized by Google

The moment of friction in inch-pounds is P_2fa. This resisting moment, transferred to the crank-pin, is equal to that of a force $\frac{P_2fa}{l}$ acting in the direction Ee. The tangential component of this resistance is $\frac{P_2fa}{l}\cos(\phi+\theta)$. The value of $\cos(\theta+\phi)$ is one when the engine is on either dead centre, so that the effect of the wrist-pin resistance is greatest at the ends of the stroke. Let $a = 5$ in., $l = 8$ ft., $f = 0.05$, and $\cos(\theta+\phi) = 1$; then the greatest tangential resistance is

$$\frac{5 \times 0.05 P_2}{8 \times 12} = 0.0026 P_2,$$

or 0.0026 lb. for every pound pressure on the piston. This decreases until the connecting-rod becomes tangent to the crank orbit, when it disappears, giving a curve similar to *vmw* in Fig. 119.

72. Friction of the Crank-pin and Crank-shaft Journals.—We will call the piston pressure, after deducting the resistance due to the friction of the wrist-pin, P_1.

The resistances at the crank-pin and crank-shaft may be considered at the same time. The pressure on the crank-pin in the direction of LE, Fig. 115, is $\frac{P_1}{\cos\varphi}$; and the pressure on the shaft in the direction EO is equal and opposite, and is the other force for the turning couple.

Let b = the radius of the crank-pin, c = the radius of the shaft, and r = the length of the crank. The moment of their combined friction about their respective axes is

$$\frac{P_1}{\cos\phi} f(b+c),$$

and the tangential resistance is

$$\frac{P_1 f(b+c)}{r\cos\phi}.$$

Digitized by Google

If we neglect the angularity of the connecting-rod, or assume the crank-pins to be at either dead-point, $\phi = 0$, and $\cos \phi = 1$. The crank-effort, neglecting friction, is $P_1 \times \frac{OE}{OH}$, and the *efficiency of the crank for any one position* is

$$E = \left.\frac{P_1 \frac{OH}{OE} - P_2 f \frac{b+c}{r \cos \phi}}{P_1 \times \frac{OH}{OE}}\right]_{\phi=0} = \frac{\frac{OH}{OE} - f\frac{b+c}{r}}{\frac{OH}{OE}}.$$

But $\frac{OH}{OE}$ is $\sin \theta$ when $\phi = 0$; hence

$$E = \frac{\sin \theta - \frac{f}{r}(b+c)}{\sin \theta} = 1 - \frac{f(b+c)}{r \sin \theta}.$$

If the values b and c are equal, as is frequently the case,

$$E = 1 - \frac{2fc}{r \sin \theta}.$$

When the engine is on its centre, $\theta = 0$, and

$$E = 1 - \infty = -\infty.$$

The efficiency remains negative for a certain angle corresponding to $E = 0$, and then passes to a positive value. To find this angle we proceed as follows:

$$0 = 1 - \frac{f(b+c)}{r \sin \theta};$$

$$\sin \theta = \frac{f(b+c)}{r};$$

$$\theta = \sin^{-1}\left\{\frac{f(b+c)}{r}\right\}.$$

Digitized by Google

Let $b = c = 6$ in., $f = 0.05$, $r = 24$ in. Then $\theta = \sin^{-1} 0.025 = 1° 30'$ (nearly).

Inside this angle no pressure, however great, could cause the engine to start, and even for some distance beyond this the work absorbed in friction is greater than that utilized. For a slow-moving engine of short stroke the efficiency could be much decreased, as the frictional resistance is directly proportional to the diameter of the journals and inversely proportional to the length of the crank. By lengthening the stroke, we not only gain as stated, but the pressure on the crank-pin being less, we can decrease its diameter, as well as that of the shaft journal, thus decreasing the moment of friction. (Increasing the length of the stroke is also a cause of increased efficiency on account of thereby decreasing the percentage of clearance, and increasing the ratio of jacketed surface to the volume of the cylinder. In unjacketed cylinders this last is a loss instead of a gain.) If, however, the piston speed be increased without increasing the length of the stroke, the pressure on the crank-pin is less, the moment of friction is less, and the work of overcoming the resistance due to friction is less for each revolution, but the total frictional resistance is the same as before the speed was increased.

73. Example Illustrating the Influence of Frictional Resistance upon the Turning Power of an Engine.—The conclusions of § 72 are based on the assumption that the dimensions of the crank-pin and shaft are unchanged; but, as before, the crank pressure being reduced, the diameter of these journals can be reduced in the ratio of (pressure)$^{\frac{1}{2}}$. The percentage of clearance space remains as before, but the cylinder will be smaller, and there will be a greater jacket efficiency, less radiation of heat and less piston friction. It is evident that the greatest efficiency for a high-speed engine is secured when the stroke is long.

Suppose the indicator-card from the engine mentioned in § 69 to be that shown by *abcdefg*, Fig. 116, and that the curve of accelerating forces is *COD*. The corrected diagram is *AlmcnoB*. In Fig. 117 is laid off, to a larger scale, the con-

Digitized by Google

stant piston friction, p', which we have assumed as 0.4 lb. per sq. in. The work of overcoming this friction is represented by *pqsr*. Above this is laid off the diagram *ptnq*, whose ordinates are the friction moments of the cross-head, found as described in § 70.

In Fig. 118, *abcd* is the curve of crank-effort, neglecting friction of engine. In Fig. 119, *AvwB* shows the work of overcoming the wrist-pin friction, and *vxyzw* that of the crank-pin

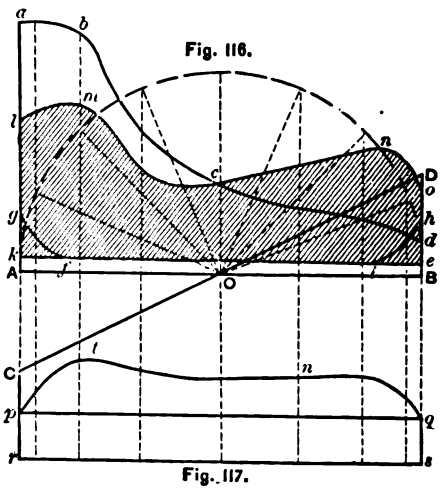

Fig. 117.

and shaft-bearings. The ordinates of these curves represent tangential resistances.

Now reducing the ordinates of Fig. 117 to tangential resistances, and adding them to those already found in Fig. 119, we have the diagram of total frictional resistance of the engine proper, or *AxtuzB*, Fig. 119. This must be reduced to the scale of Fig. 118, and the difference between the corresponding ordinates gives the final diagram of crank-effort, or $a'b'c'd'$. By measuring this diagram, the mean crank-effort, $\left(= \frac{2 \text{ mean ordinate}}{\pi}\right)$, without friction is found to be 18.5 lbs. per sq. in. of piston; and the mean frictional resistance is 1.25 lbs. per sq. in., or about 6.75 per cent of the I. H. P. But the ratio

Digitized by Google

of frictional resistance to crank-effort is not constant. Thus we find that between 0° and 22½° the mean crank-effort is 7 lbs. and the mean frictional resistance is 1.2 lbs., or a loss of 17 per cent. Between 67½° and 90° the loss is found to be only 5.7 per cent. At the beginning and end of the stroke the crank-effort is negative, as shown at *aa'e* and *dd'f*, Fig. 118. We

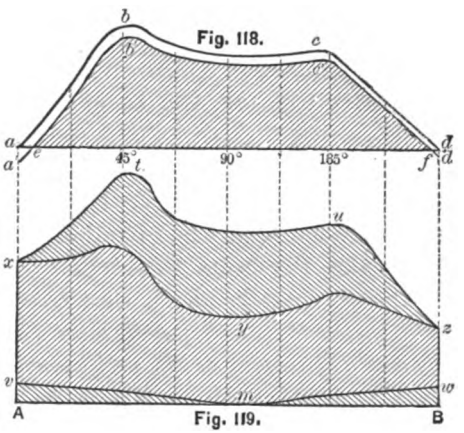

Fig. 118.

Fig. 119.

must then, as far as possible, cause such a distribution of piston pressure that the ratio of crank-effort to the mean crank-effort shall be large near the middle of the stroke, and that the crank-effort shall be zero, rather than a negative quantity, at the ends. To produce the former result, the ratio of the middle ordinate of the corrected indicator-diagram to the mean ordinate must be as large as possible. The latter effect can be produced at the beginning of the stroke by causing the steam-valve to open so slowly that just enough steam is admitted to produce the necessary accelerating effort, and to overcome the friction of the piston and cross-head. At the end of the stroke the same thing may be effected by a proper adjustment of cushion.

The friction-diagrams, Figs. 117 and 119, give a general idea of how to correct the curve of crank-efforts, but do not take into account the friction from the weights of the connecting-rod and shaft, or the valve-friction. These will vary with

Digitized by Google

the kind and type of engine used. The air-pump will cause an increased resistance which should not be more than 5 per cent, and the circulating and feed pumps each about 1 per cent. These resistances, although reducing the power of the engine considerably, do not materially affect the general nature of the crank-effort.

Thus far we have only considered the crank-efforts of simple engines. If there are two or more engines working on the same shaft, their crank-effort curves must be combined, as illustrated in Figs. 106, 107, 108, 109, to get the total turning power.

In order to maintain a constant velocity of rotation, the resistance being constant, the crank-effort should be constant, and the locus would be a straight line parallel to the axis of X.

74. Reverse of the Previous Problem.—We now come to the reverse of the previous problem, viz.: *Given a certain resistance to be overcome by the engine, determine the shape of the curve of pressure and the weight of the reciprocating parts.*

Let there be two engines with cranks at 90°, and AB, Fig. 120, be the semi-circumference of the crank circle, and AC the

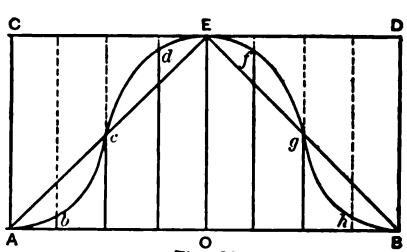

Fig. 120.

uniform crank-effort. Complete the rectangle $ABCD$ to represent the work done by both engines during a half-revolution. The crank-effort curves of the two engines should be such that, being combined, they will give the resultant curve CD. If the diagrams were two triangles AEB, they would combine properly; but on account of friction we wish the pressure at the ends of the stroke to be as small as possible, and in the middle correspondingly great. So we express the lower part

Digitized by Google

of the curve by *Abc*, and raise the upper part to *edE*, and get a better distribution of pressure. These curves are parabolas tangent to each other at *c*.

We now, by reversing the process illustrated in Fig. 100, find the piston-pressure corresponding to the various ordinates of the curve *AbcdEfghB*, and get the curve of piston-pressures, Fig. 121.

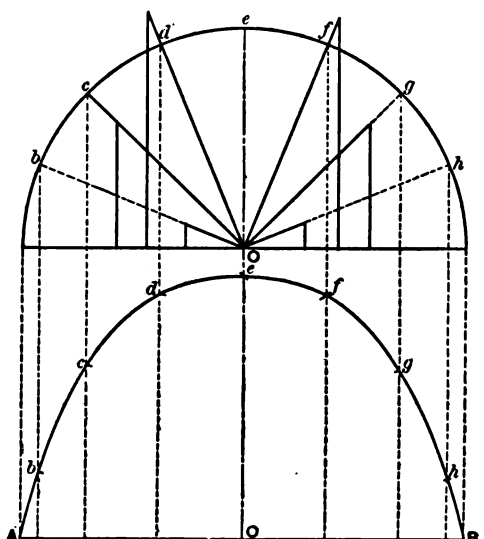

Fig. 121.

The actual curve of pressures could, for any given speed, be made to correspond to this curve by properly proportioning the valve-opening to the piston speed. This, however, would be found uneconomical from a thermodynamic point of view, so that we must be content with an approximation to the ideal curve which will not detract from the thermal efficiency of the engine.

EXAMPLE. Suppose we have decided to use a pressure of steam of 80 lbs. absolute, and a ratio of expansion of 9. The ideal diagram * is shown by *abcdejBAa*, Fig. 122. Now, com-

* Fig. 124 covers a part of Fig. 122.

Digitized by Google

paring this with Fig. 121, we see that, whereas in the latter figure the middle ordinate is the largest, in Fig. 122 the middle

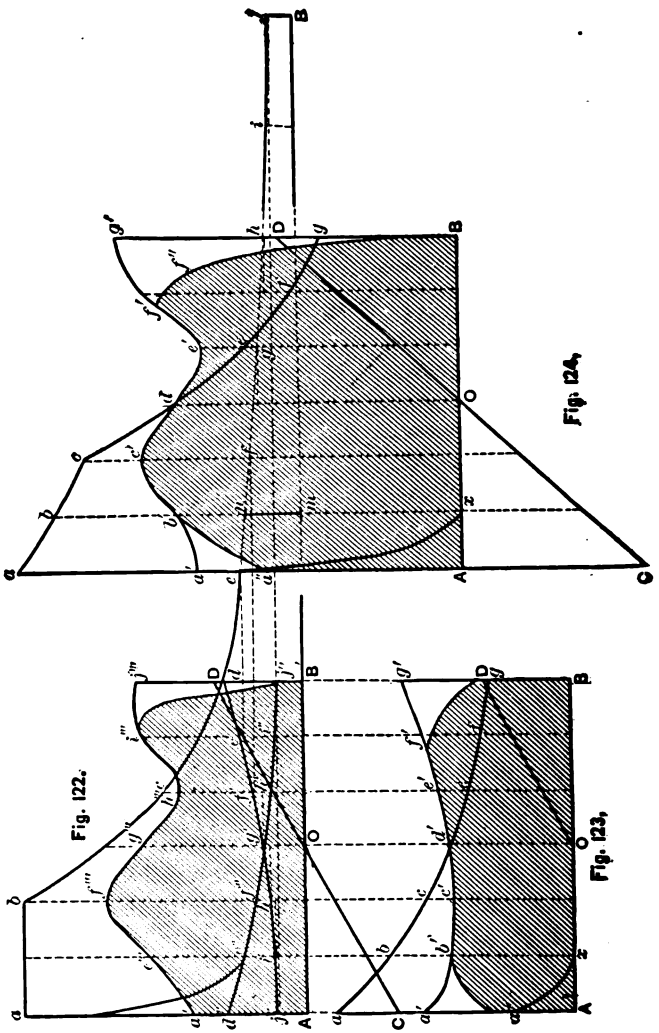

ordinate, *mn*, is not only much smaller than those to the left, but smaller than the mean ordinate. No modifications of weights or velocities can materially change this middle ordinate, *mn*,

Digitized by Google

and the only thing that can be done is to transfer pressures from any place in the first half of the diagram to the corresponding place in the second half, making a curve high at either end and low in the middle. This must be so done as to make the resulting curve symmetrical, as far as possible, with the middle ordinate. But the greater part of the pressure still occurs near the end of the stroke, where the percentage of frictional resistance is greatest.

We will now see if an improvement can be made by expanding the steam in two cylinders instead of one. Suppose the expansion to be carried to *d* in the high-pressure cylinder. Reversing the remainder of the expansion curve to *de'f'j'*, we get the back-pressure curve of the high-pressure and the expansion curve of the low-pressure cylinder. Reversing this curve again we get the diagram of *effective* pressure, *abdj''d''*, for the high-pressure, and *d''g'j''B'A* for the low-pressure cylinder.

The volume of the cylinders being 1 : 3, increase the pressures in the low-pressure diagram three times in order to reduce them to corresponding pressures on the high-pressure piston. This is shown in Fig. 123.

We see that these diagrams can be modified by the acceler ating line *CD*, found by trial, so that the resultant pressures are fairly well distributed, and can be improved by cushioning and wire-drawing the steam, giving the resultant diagrams as hatched. In Fig. 123 the trial value of the accelerating curve is too great, making the greatest pressure in the latter half of the stroke. The initial ordinate, *AC*, should therefore be reduced.

If the engine is to be tandem compound, as Fig. 83, B, we must combine these diagrams to get the resultant pressure (reduced to pressures per square inch of the high-pressure piston), and having the diagram (modified by cushion, etc.) *abcdefgBxa''* in Fig. 124. This gives, when corrected for inertia, *a''b'c'de'f'f''BA*, which is a better curve than either of the separate ones. A pair of these engines connected at 90° give a crank-effort which is not far from uniform. The influence of the connecting-rod has not been taken into account in this

Digitized by Google

problem, so that the results are only averages for both strokes. The cushion may with advantage be carried higher than would be found economical by simply examining the thermal efficiency of the steam.

After adjusting the distribution of pressure, the mean ordinate of the diagram can be found by measurement, thus giving the mean effective pressure per square inch of piston. The stroke having been fixed upon, we can find the area of the piston in the usual way. We next measure the initial ordinate, AC, of the inertia diagram; this gives the pressure per square inch of piston to produce the initial acceleration, or

$$P_a = \frac{0.00034\,WR^2r}{A}. \quad \text{(See § 66.)} \quad . \quad . \quad . \quad . \quad (1)$$

If the number of revolutions, R, has been decided upon, equation (1) may be solved for W. If the weight of the reciprocating parts, W, is given, we must find R; but for a given stroke R varies as $\frac{1}{A}$.

We know that

$$A = \frac{\text{I. H. P.} \times 33000}{4Rrp_e}, \quad . \quad . \quad . \quad . \quad . \quad (2)$$

where p_e is the intensity of the mean effective pressure. Hence eq. (1) becomes

$$P_a = \frac{0.00034\,WR^2r^2p_e \times 4}{33000 \times \text{I. H. P.}};$$

and

$$R = \left(\frac{P_a \times \text{I. H. P.}}{0.000000004121\,Wr^2p_e}\right)^{\frac{1}{3}}, \quad . \quad . \quad . \quad . \quad (3)$$

which gives the number of revolutions, and substituting R in (2), we find the piston area.

Summary.—The method of procedure is as follows:

1. Draw the theoretical indicator-diagram for the desired pressure and expansion.
2. Reverse the line of back pressures.
3. Find, by trial, the curve of accelerating forces which will

Digitized by Google

give a distribution of pressure as near like the ideal curve as possible.

4. Combine this with the indicator-card.

5. Adjust the cushion and admission lines to remove unnecessary pressure at the ends of the stroke.

6. Find the mean ordinate of the corrected diagram.

7. Solve for R or W as required.

75. Weight of the Fly-wheel.—Since we can only approximate to a constant crank effort in coupled engines, we must control the fluctuations of turning power by means of a fly-wheel, provided the variation of crank-effort produces too great fluctuations of speed. In single engines the need of a fly-wheel is much greater. In Fig. 125 is drawn a curve of crank-effort *AbcdB*. *LM* is the line of mean crank-effort, found

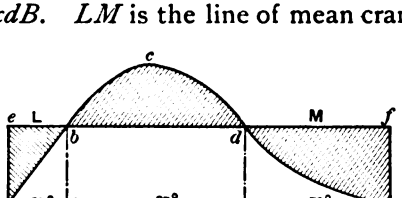

Fig. 125.

by measurement or calculation. We find, by measurement, that for 25° the crank-effort is below the mean *Ae*, the speed is reduced, and the fly-wheel gives up its previously stored energy. For the next 85° the crank-effort is in excess of the resistance, the speed is increased, and the fly-wheel stores up energy. Again, for the remaining 70°, the curve falls below *LM*. The area *bcd* represents the excess of effort over resistance during the acceleration of the velocity; the areas *Aeb* and *Bfd*, the excess of resistance over crank-effort. The areas must be equal.

Let us assume the following, in addition to the terms given in § 66, viz.:

v_1 and v_2 = the greatest and least desirable velocities of the fly-wheel rim in feet per second;

v = the arithmetical mean of the same = $\frac{v_1 + v_2}{2}$;

Digitized by Google

$\frac{1}{n}$ = fractional variation of speed, varying from $\frac{1}{10}$ to $\frac{1}{100}$;

D = mean diameter of the fly-wheel in feet (or twice the radius of gyration of the rim about the axis of the shaft;)

E_1, E, and E_2 = energy stored up in the fly-wheel at velocities v_1, v, and v_2;

K = ratio of excess or deficiency of crank effort to the whole crank-effort = area $\frac{bcd}{AefB}$,

W = weight of the fly-wheel rim in pounds.

By mechanics,

$$E_1 = \frac{Wv_1^2}{2g} \text{ and } E_2 = \frac{Wv_2^2}{2g};$$

therefore

$$E_1 - E_2 = \frac{W}{2g}(v_1^2 - v_2^2). \quad . \quad . \quad . \quad . \quad . \quad . \quad . \quad . \quad (1)$$

But, in one revolution,

$$\frac{E_1 - E_2}{K} = \frac{33000 \text{ I. H. P.}}{R}. \quad . \quad . \quad . \quad . \quad . \quad . \quad . \quad . \quad (2)$$

Combining (1) and (2), we have

$$\frac{33000 \times K \times \text{I. H. P.}}{R} = \frac{W}{2g}(v_1^2 - v_2^2). \quad . \quad . \quad . \quad (3)$$

But $v_1 + v_2 = 2v$, and $v_1 - v_2 = \frac{v}{n}$; therefore (3) becomes

$$\frac{33000 \times K \times \text{I. H. P.}}{R} = \frac{Wv^2}{gn},$$

and

$$W = \frac{33000 \times K \times \text{I. H. P.} \times gn}{Rv^2}. \quad . \quad . \quad . \quad (4)$$

But

$$v^2 = \left(\frac{RD\pi}{60}\right)^2;$$

Digitized by Google

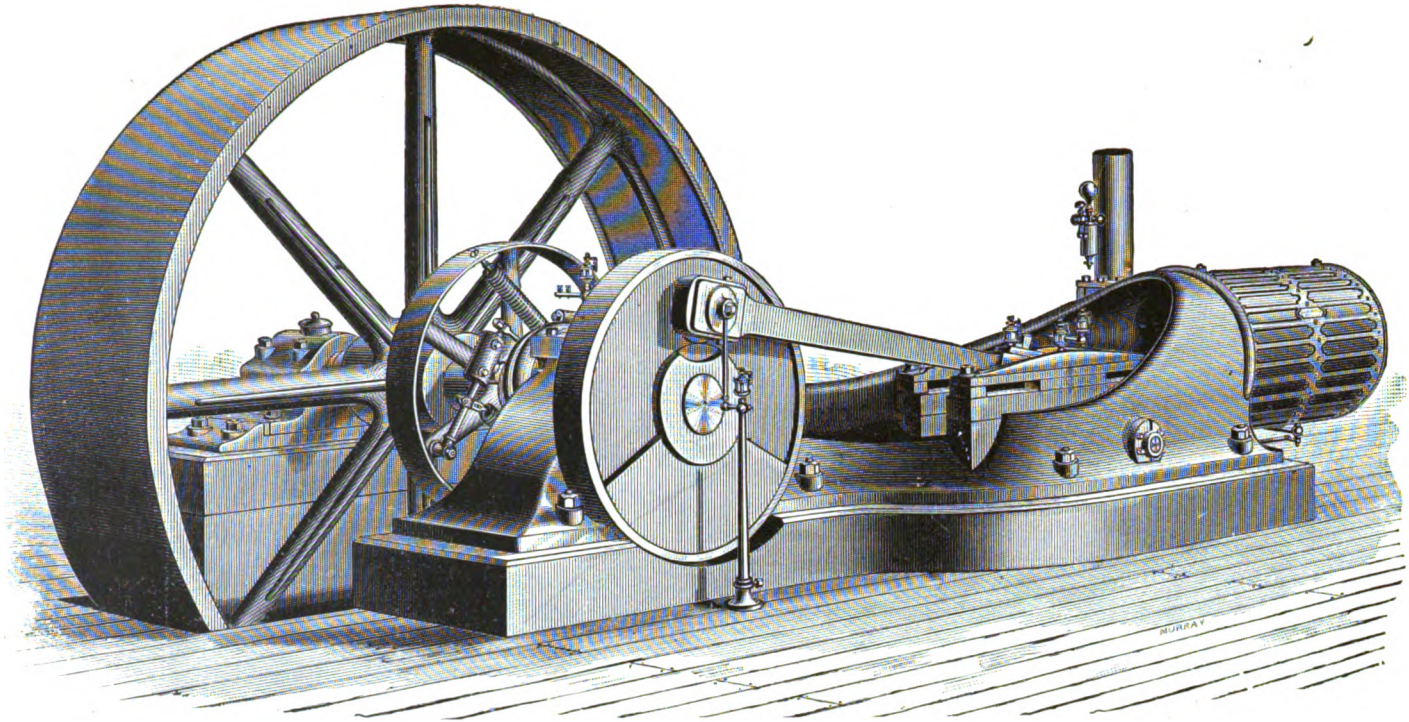

Fig. 126.

Digitized by Google

therefore

$$\text{Weight of fly-wheel rim} = W = \frac{387587500 K n \times \text{I. H. P.}}{R^2 D^2}. \quad (5)^*$$

Forms of balanced crank-arms, which are really fly-wheels, are represented in §§ 90 and 91. Whenever the fly-wheel is

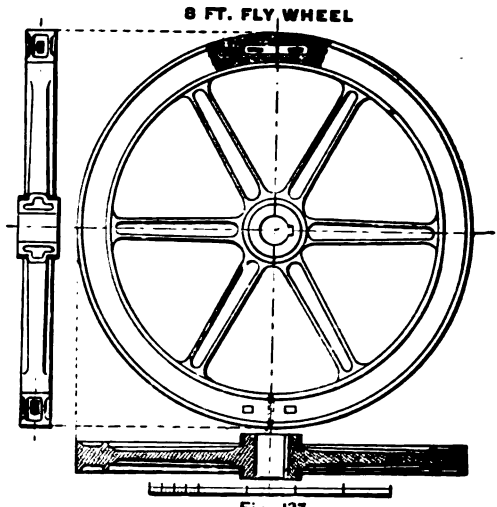

Fig. 127.

more than six or eight feet in diameter it is usual to cast it in two or more parts, which are then bolted together. When cast

* To find the value of D, proceed as follows:

Let a = extreme radius of rim;
b = inside radius of rim;
r = any radius between a and b.

The generating line is $2\pi r$, the generating area $2\pi r dr$, and the moment of inertia is

$$W\rho^2 = 2\pi \int_b^a r^3 dr = \frac{\pi}{2}(a^4 - b^4);$$

$$\rho^2 = \frac{\pi}{2} \cdot \frac{a^4 - b^4}{\pi(a^2 - b^2)} = \frac{a^2 + b^2}{2};$$

$$\rho = \sqrt{\frac{a^2 + b^2}{2}} = \frac{D}{2}; \quad D = 2\sqrt{\frac{a^2 + b^2}{2}} = \sqrt{2(a^2 + b^2)}.$$

Digitized by Google

solid, they are generally made similar to that for the Buckeye engine shown in Fig. 126. The arms are usually either cruciform, elliptical, or I-shaped in cross-section.

Fig. 127 is a fly-wheel,* eight feet in diameter, made in two parts and secured by a bar and keys of wrought-iron as shown in partial section.

Fig. 128 shows one method used in building up a fly-wheel.† The rim is cast in sections, each section having one

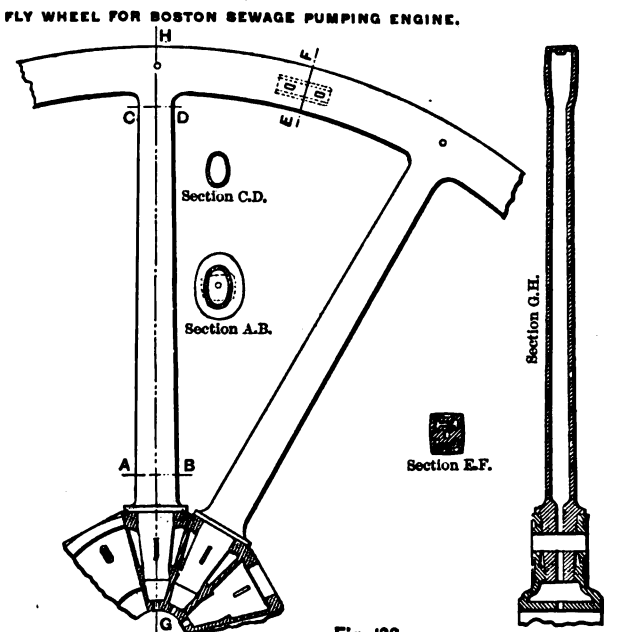

Fig. 128.

arm or spoke cast with it. The sections are fastened together, and to the hub, as shown. The segments are cored out.

Marine engines and locomotives are never provided with a fly-wheel, as the propellers and drivers respectively answer the purpose.

---

* This figure is one of Busbridge's designs.

† This figure is Mr. E. D. Leavitt's design for the Boston sewage pumping-engine.

Digitized by Google

CHAPTER IX.

DESIGN OF THE PISTON-ROD, CROSS-HEAD, AND GUIDE.

76. Design of Diameter of the Piston-rod.—The formulæ used in designing the valve-stem, § 39, will serve equally well for the piston-rod. It is considered equivalent to a pillar fixed at one end and rounded or jointed at the other. (See § 71, Rankine's *Steam-engine*.)

Let P = maximum load on the rod, in pounds;
S = sectional area of the rod, in sq. in.;
l = length of the rod, in inches;
d = diameter of the rod, in inches;
f = resistance of the material to crushing, in lbs. per sq. in. = 36000 for wrought-iron or mild steel;
a = a constant = $\frac{1}{3000}$ for wrought-iron or mild steel;
f' = factor of safety;
E = modulus of elasticity of the material used;
= 28000000 for wrought-iron, 42000000 for steel:
I = moment of inertia of the section $S = \frac{\pi d^4}{64}$;
D = diameter of piston in inches;
p_1 = maximum unbalanced pressure in cylinder, in pounds per sq. in.;
r = ratio of $\frac{l}{d}$.

Diameter by the Gordon-Hodgkinson formula:

$$P = \frac{fS}{1 + \frac{16}{9} a \frac{l^2}{d^2}} = \frac{fS}{1 + \frac{16}{9} ar^2} \quad . \quad . \quad . \quad . \quad (1)$$

Digitized by Google

The length will be known after designing the cylinder, and d may be found approximately by the formula for a short rod subjected to direct crushing, or

$$\frac{\pi d^2}{4} = S = \frac{P}{f},$$

which will give a value for r. The value of r may also be taken from the following table (from Seaton's *Manual of Marine Engineering*):

Kind of Engine.	Kind of Stroke.	Absolute Steam-pressure.	r.
Direct-acting	Short.	45	7 to 8
" "	"	95	6 to 7
" "	Long.	45	8 to 10
" "	"	95	7 to 8
" "	Very long.	95	10 to 12
Oscillating	Short.	45	10 to 15
"	Long.	45	15 to 18
" Compound	"	85	10 to 12
Back-acting	Short.	45	22 to 28
" "	"	85	18 to 23

Substituting in (1), $f = 36000$, $S = \frac{\pi}{4}d^2$, $a = \frac{1}{3000}$, $P = \frac{\pi}{4} D^2 p_1$, factor of safety $= 6$, we have

$$\text{Diameter of piston-rod} = \frac{D}{12725}\sqrt{p_1(27000 + 16r^2)}; \quad (2)$$

and if f' = factor of safety,

$$\text{Diameter of piston-rod} = \frac{D}{31175}\sqrt{f' p_1(27000 + 16r^2)}. \quad (3)$$

Diameter by Weisbach's formula (see *Mechanics of Engineering*, I., § 4, art. 266):

$$P = \left(\frac{\pi}{2l}\right)^2 IE, \quad (4)$$

Digitized by Google

or

$$\frac{\pi}{4}D^2p_1 = \left(\frac{\pi}{2l}\right)^2 \cdot \frac{\pi d^4}{64}E = \frac{\pi^3 E d^4}{256} \cdot \frac{d^2}{l^2} = \frac{\pi^3 E d^4}{256r^2},$$

$$d^2 = \frac{64D^2p_1r^2}{\pi^3 E}. \quad . \quad . \quad . \quad . \quad . \quad . \quad . \quad . \quad . \quad . \quad . \quad (5)$$

The value of r may be found as for formulæ (1).
Substituting values and reducing, we have

$$\text{Diameter of wrought-iron piston-rod} = \frac{Dr}{2078}\sqrt{p_1 f'}. \quad (6)$$

This becomes, using factor of safety of 6,

$$\text{Diameter of wrought-iron piston-rod} = \frac{Dr}{850}\sqrt{p_1}. \quad . \quad . \quad (7)$$

$$\text{Diameter of steel piston-rod} = \frac{Dr}{2545}\sqrt{p_1 f'}. \quad . \quad . \quad (8)$$

This becomes, using factor of safety of 6,

$$\text{Diameter of steel piston-rod} = \frac{Dr}{1040}\sqrt{p_1}. \quad . \quad . \quad . \quad (9)$$

We have here formulæ for designing the diameter of the piston-rod to resist buckling. In case the tendency to be crushed for wrought-iron rod, or to be pulled apart for steel, is equal to that of buckling, we may place the following formulæ equal, or

$$\left.\begin{aligned} P &= fS, \\ P &= \left(\frac{\pi}{2l}\right)^2 \cdot \frac{\pi d}{64}E. \end{aligned}\right\} \quad . \quad . \quad . \quad . \quad . \quad . \quad (10)$$

Whence

$$fS = \left(\frac{\pi}{2l}\right)^2 \cdot \frac{\pi d^4}{64} \cdot E = f\frac{\pi}{4}d^2.$$

Reducing,

$$\frac{1}{r} = \frac{d}{l} = \frac{8}{\pi}\sqrt{\frac{f}{E}}. \quad . \quad . \quad . \quad . \quad . \quad . \quad . \quad (11)$$

Digitized by Google

For wrought-iron, $f = 36000$, $E = 28000000$, and $\frac{1}{r} = \frac{d}{l} = \frac{1}{11}$.

For steel, f becomes the tensile strength rather than the compressive, and is 90000, $E = 42000000$, and $\frac{1}{r} = \frac{d}{l} = \frac{1}{8.5}$.

In case r exceeds 8.5 for steel piston-rod, or 11 for one of wrought-iron, use formulæ (6), (7), (8), and (9); otherwise use the first of (10).

Diameter by Empirical Formulæ:

Seaton gives

$$\text{Diameter of piston-rod} = \frac{D}{F}\sqrt{p_1}, \quad . \quad . \quad . \quad (12)$$

where $F = 45$ to 60 for direct-acting engines,
$F = 80$ for back-acting engines, 2 rods.

Another one used is:

$$\text{Diameter of piston-rod} = CD, \quad . \quad . \quad . \quad . \quad (13)$$

where $C = 0.1$ for wrought-iron rod, condensing engine;
$= 0.08$ for steel rod, condensing engine;
$= 0.125$ for wrought-iron rod, non-condensing engine;
$= 0.16$ for steel rod, non-condensing engine.

77. Design of Piston-end of Piston-rod.—The piston-rod is usually tapered, from $\frac{3}{4}$ in. to 3 in. to the foot, in the hub of the piston. The various shapes used for the piston-end of the piston-rod are represented in Figs. 2, 3, 4, 5, 14, 15, and 16. The cross-head end of the piston-rod is also made in a variety of shapes adapted to the particular form of cross-head used. For a description of this part see § 81. The piston is secured to the piston-rod by a nut or key. The effective cross-section of the thread on the rod should be sufficient to allow a safe stress of 5000 lbs. per sq. in. for wrought-iron, and 7000 lbs. for a steel rod. Hence

$$\text{Diameter of root of thread} = \frac{D}{70}\sqrt{p_1}, \text{ if of wrought-iron;}$$

$$\text{“ “ “ “} = \frac{D}{84}\sqrt{p_1}, \text{ if of steel.}$$

Digitized by Google

Here D = diameter of the piston, and p_1 = greatest pressure in pounds per sq. in. upon it. The length of the thread along the rod is generally equal to its diameter.

The thread must be strong enough to resist a shearing force, in its effective shearing section, equal to the greatest load on the piston. (See table of screw-threads, § 123*A*.)

For the design of the cross-head end of the piston-rod, see § 83.

78. Area of the Slides (Fig. 130).

Let D = diameter of piston in inches;

p_1 = greatest unbalanced pressure, per sq. in., in lbs. on the piston;

p_0 = pressure allowable per sq. in. of area of slides;

N = total normal pressure on the slides;

A = area of the slides in sq. in.;

L = stroke of engine;

n = length of connecting-rod ÷ by the length of the crank.

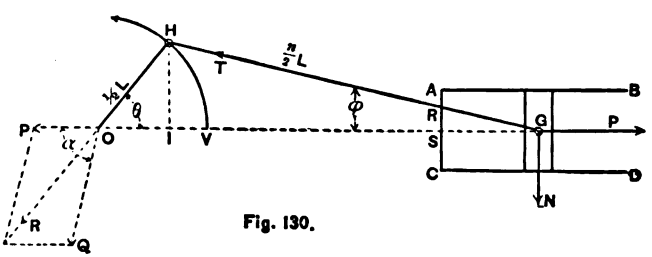

Fig. 130.

If the engine be horizontal and the crank "throws over" as the piston moves inboard, all the pressure and wear comes on the lower slide, and *vice versa* when the engine is reversed.

From the figure,

$$P = T \cos \phi. \quad . \quad . \quad . \quad . \quad . \quad . \quad . \quad (1)$$

$$N = T \sin \phi. \quad . \quad . \quad . \quad . \quad . \quad . \quad . \quad (2)$$

Therefore $$N = P \tan \phi. \quad . \quad . \quad . \quad . \quad . \quad . \quad . \quad (3)$$

Digitized by Google

N has its maximum value, very nearly, if P is constant, when the engine is at half-stroke, i.e., when θ is 90°.

Then $OG = \frac{L}{2}\sqrt{n^2 - 1}$, and $\tan \phi = \frac{\frac{1}{2}L}{\frac{1}{2}L\sqrt{n^2 - 1}} = \frac{1}{\sqrt{n^2 - 1}}$;

whence

$$N = \frac{P}{\sqrt{n^2 - 1}}. \quad . \quad . \quad . \quad . \quad . \quad . \quad . \quad . \quad (4)$$

The surface of the slide must be made large enough to receive this load, and not be heated or abraded thereby. The guide may be cast-iron, and the slide brass or white metal. The normal pressure on the slide may be as high as 500 lbs. per sq. in., but this is when there is good lubrication and freedom from dust. Stationary and marine engines are usually designed to carry 100 lbs. per sq. in. of slide, and the area in this case is reduced from 50 to 60 per cent by grooves. In locomotive engines the pressure ranges from 40 to 50 lbs. per sq. in. of slide, on account of inaccessibility of the slide, dirt, cinder, etc. The area of the slides should be computed from the formula

$$A = \text{area of slides} = \frac{N}{p_0} = \frac{P}{p_0\sqrt{n^2 - 1}} = \frac{0.7854D^2p_1}{p_0\sqrt{n^2 - 1}}.$$

79. Design of the Guides.—Ordinarily the guide is a part of the engine frame, and no calculation is necessary. But for reversing engines, and engines of special design, it is necessary to compute the cross-section. The guide should be designed for rigidity, and if so, the strength will be ample. The effective length of guide is equal to the stroke of the piston plus the thickness of the cross-head plus an amount at each end for clearance. The maximum load N, Fig. 130, is when the engine is at mid-stroke, provided P is constant, and it is then $\frac{P}{\sqrt{n^2 - 1}}$. The breadth of the guide is constant, b, and the depth, h, will be variable, being greatest at the middle of the length, l. The

Digitized by Google

cross-section is a rectangle, and the elevation of the guides is, for uniform strength, a pair of parabolas, vertices at the end and meeting at the centre. (See § 299, Rankine's *Applied Mech.*)

The greatest deflection allowable is $\frac{1}{100}$ inch.

The following formula for the deflection of a beam supported at the ends and loaded at the centre will apply to this case:

$$\text{Deflection} = \frac{1}{100} = \frac{1}{48} \cdot \frac{Nl^3}{EI} \cdot \quad . \quad . \quad . \quad . \quad . \quad (1)$$

Here, $N = \frac{P}{\sqrt{n^2 - 1}}$; E = modulus of elasticity of metal used = 28000000 to 40000000 for wrought-iron and steel, and 18000000 for cast-iron; I = moment of inertia of cross-section of guide = $\frac{bh^3}{12}$ for a rectangle; p_1 and D have the same values as in § 78. Therefore

$$\frac{1}{100} = \frac{1}{48} \cdot \frac{\frac{\pi}{4} D^2 p_1}{\sqrt{n^2 - 1}} \frac{l^2}{E} \cdot \frac{12}{bh^3}.$$

For a factor of safety of 6,

$$h = \frac{l}{62} \sqrt[3]{\frac{D^2 p_1}{b\sqrt{n^2 - 1}}}, \quad \left\{ \begin{array}{l} \text{For a wrought-iron} \\ \text{or steel guide.} \end{array} \right.$$

$$h = \frac{l}{53} \sqrt[3]{\frac{D^2 p_1}{b\sqrt{n^2 - 1}}}, \quad \left\{ \begin{array}{l} \text{For a cast-iron} \\ \text{guide.} \end{array} \right.$$

When factor of safety is f',

$$h = \frac{l}{125} \sqrt[3]{\frac{D^2 p_1}{f' b\sqrt{n^2 - 1}}}, \quad \left\{ \begin{array}{l} \text{For a wrought-iron} \\ \text{or steel guide.} \end{array} \right.$$

$$h = \frac{l}{97} \sqrt[3]{\frac{D^2 p_1}{f' b\sqrt{n^2 - 1}}}, \quad \left\{ \begin{array}{l} \text{For a cast-iron} \\ \text{guide.} \end{array} \right.$$

Digitized by Google

80. Distance between the Guides.—In Fig. 130 the connecting-rod is drawn as just clearing the upper guide, *AB*. When there is no upper guide, the following discussion is still applicable, as provisions must be made for the rod clearing the lower guide. In any case of centre-line analysis it is always necessary to take into account the diameter of the rod, so that the space *AS* is equal to the diameter of the connecting-rod plus clearance at top plus the distance from the under side of the rod to the line of centres, *OG*; i.e.,

$$AS = \text{diameter of connecting-rod} + \overline{AR}.$$

Let $y = RS$; then

$$RS : HI :: GS : GI;$$

or, since $GS = L - IV$,

$$y : \frac{L}{2}\sin\theta :: L - \frac{L}{2}\text{versin}\,\theta : \sqrt{\frac{L^2n^2}{4} - \frac{L^2}{4}\sin^2\theta};$$

$$y : \frac{L}{2}\sin\theta :: 1 + \cos\theta : \sqrt{n^2 - \sin^2\theta};$$

$$y = \frac{L\sin\theta(1+\cos\theta)}{2\sqrt{n^2 - \sin^2\theta}} = \frac{2L\sin^2\frac{\theta}{2}\cos\frac{\theta}{2}}{\sqrt{n^2 - \sin^2\theta}} \quad . \quad . \quad . \quad . \quad (1)$$

Differentiating (1), we find that $\theta = 60$ (nearly) when y is greatest; therefore the greatest value of y is

$$y\Big]_{Max.} = \frac{L\sin 60(1+\cos 60)}{2\sqrt{n^2 - \sin^2 60}}\Big]_{60^\circ} = \frac{1.3L}{\sqrt{4n^2 - 3}}. \quad . \quad (2)$$

Hence the half-depth between the guides is

$$\frac{1.3L}{\sqrt{4n^2 - 3}} + \text{clearance between rod and guide} + \frac{\text{diameter of connecting-rod}}{2}.$$

Digitized by Google

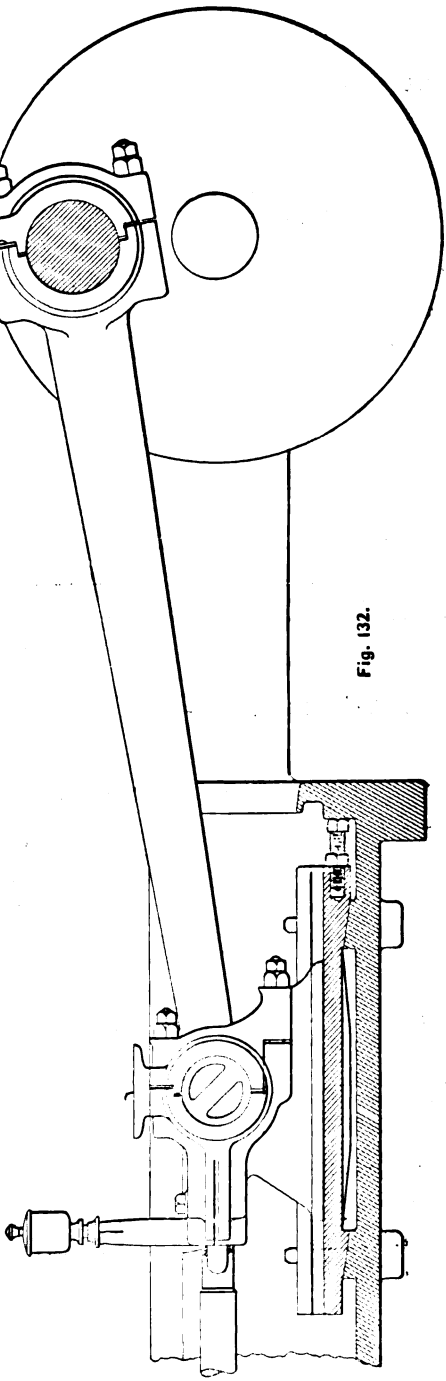

Fig. 132.

Digitized by Google

The guides, though generally made of cast-iron, are of wrought-iron for locomotives. The shape of the guide must conform to the type of cross-head selected.

Various forms of guides are illustrated in the following article, and also in figures 57A, 91, 92, and 126. Fig. 132 illustrates the cross-head and under guide for the Straight-line engine. The wear is taken up by means of the set-screw as shown. Fig. 135 is a detailed drawing of the cross-head of this engine. See also the guide shown at *P* in Fig. 172.

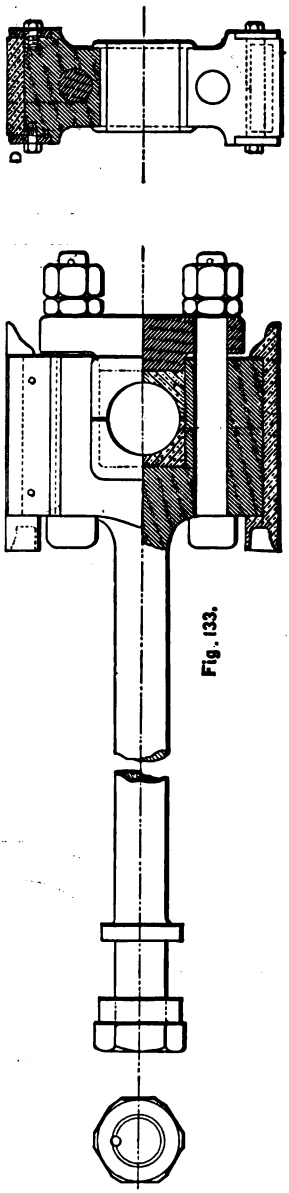

Fig. 133.

81. The Cross-head is made in various forms, and no fixed rules will be applicable in its design. The piston-rod is *rigidly secured* to the cross-head, and the connecting-rod is jointed to it in different ways. The bearing-surface for the wrist-pin is found by the formulæ for crank-pin design, § 85.

Perhaps more taste is shown in designing the cross-head than any other part of the engine.

Fig. 133 is a form sometimes used on marine engines. The cross-head is the end of the piston-rod enlarged. A brass slipper is bolted to each side, and forms the bearing surface.

The wrist-pin is keyed to the forked end of the connecting-rod, and turns in the cross-head. A wrought-iron cap is used as shown. The upper view shows the cap removed and the end in half-section and half-elevation.

Digitized by Google

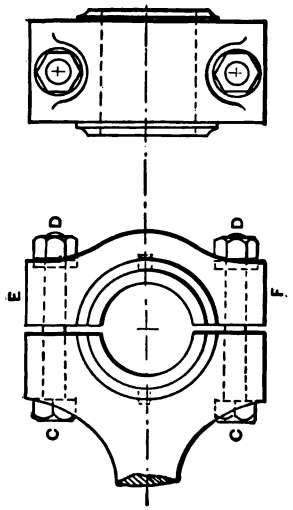

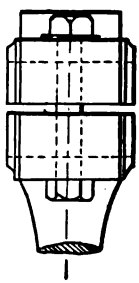

Fig. 139.

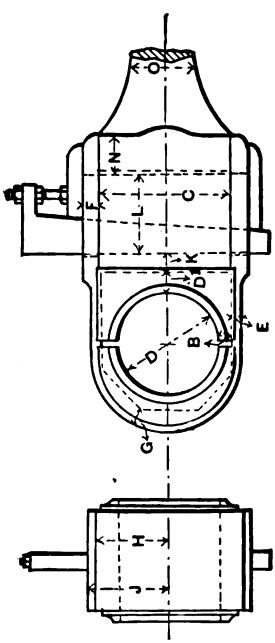

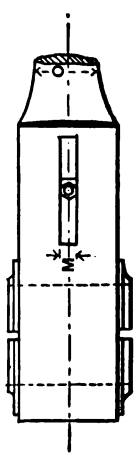

Fig. 140.

Digitized by Google

Then, since

$$T = \frac{nP}{\sqrt{n^2 - 1}} = \frac{n\pi D^2 p_1}{4\sqrt{n^2 - 1}} \text{ (see §§ 76, 78, and Fig. 130),}$$

$$\frac{2}{3} \cdot \frac{n\pi D^2 p_1}{4\sqrt{n^2 - 1}} = \frac{\pi}{4} d^2 f;$$

and

$$\text{Effective Diam. of a wrought-iron bolt} = \frac{D}{30}\sqrt{\frac{np_1}{\sqrt{n^2 - 1}}}; \quad (1)$$

$$\text{Effective Diameter of a steel bolt} \quad = \frac{D}{37}\sqrt{\frac{np_1}{\sqrt{n^2 - 1}}}. \quad (2)$$

These formulæ will serve for the cross-head end of the piston-rod as shown in Fig. 137.

The Cap, EF, shown in Fig. 139, is a beam loaded at the centre and supported at the ends. It will be designed for both rigidity and strength, and the larger dimensions adopted.

Let $\frac{1}{100}$ in. = maximum deflection allowable;

$T = \frac{nP}{\sqrt{n^2 - 1}} = \frac{\pi}{4} \cdot \frac{nD^2 p_1}{\sqrt{n^2 - 1}}$ = maximum load on the centre of the cap (see § 76);

l = length of cap between centres of bolts;

f = the safe breaking-across stress of the metal used in the cap = 3000 for cast-iron and 5000 for wrought-iron;

E = modulus of elasticity of the metal used = 28000000 for wrought-iron, 42000000 for steel, 18000000 for cast-iron;

I = moment of inertia of cross-section of cap $= \frac{bd^3}{12}$, for a rectangular cross-section;

b = breadth of the cap or distance parallel to the journal, and is by empirical rules = to $\frac{1}{2}$

Digitized by Google

to $\frac{3}{8}$ of *length of journal*, also = *diameter of neck of connecting-rod* + $\frac{1}{4}$ to $\frac{1}{2}$ in.;

d = depth of cap = according to empirical rules 0.6 diameter of connecting-rod, also = 0.8 diameter of bolt + $\frac{\text{pitch of thread on bolt}}{10}$

= effective diameter of bolt.

For *rigidity* use

$$\frac{1}{100} = \frac{1}{48} \cdot \frac{Tl^3}{EI}; \quad \ldots \ldots \quad (3)$$

For *strength* use

$$T\frac{l}{2} = f\frac{bd^3}{6}. \quad \ldots \ldots \quad (4)$$

Hence we have

$$\text{Depth of Cap for Rigidity} = 2.7l\sqrt[3]{\frac{nD^3p_1}{bE\sqrt{n^2-1}}}; \quad \ldots \quad (5)$$

$$\text{Depth of Cap for Strength} = 1.5D\sqrt{\frac{np_1l}{fb\sqrt{n^2-1}}}. \quad \ldots \quad (6)$$

Formulæ (5) and (6) give the depth at the centre. The cap may be made parabolic, with the least thickness at the ends. The ends of the cap may be proportioned by the formulæ given in § 42. These formulæ apply to the cross-head end of the piston-rod as shown in Fig. 133. Where the connecting-rod is forked at the cross-head end the journal may be between the prongs and keyed to them, and turn in the cross-head, thus giving a central bearing; or the journal may be fixed, and the bearing-surfaces will then be in the two prongs. In the former case the metal around the wrist-pin or journal is to be proportioned by the rules given in § 89 for the crank-arms, or by formulæ in § 42; in the latter case the methods given in this article are applicable.

When the connecting-rod end is strapped and keyed, as in Fig. 140, the strap is designed for tensile strength only,

Digitized by Google

and $\frac{2}{3}T$ is assumed, under the most unfavorable circumstances, to come on one arm.

The necessary cross-section for the *strap* is found as follows, where

b = breadth of strap, or width parallel to the journal, in inches;

t = thickness of strap in inches (marked G in the figure);

f = safe tensile stress of metal used = 6000 for wrought-iron and 9000 for steel;

T = maximum pull on rod $= \frac{n}{\sqrt{n^2-1}} \frac{\pi}{4} D^2 p_1$. (See § 76 and Fig. 130.)

Then

$$fbt = \tfrac{2}{3} T,$$

and

$$fbt = \frac{2}{3} \frac{n}{\sqrt{n^2-1}} \frac{\pi}{4} D^2 p_1.$$

Therefore

$$\text{Thickness of strap if of wrought-iron} = \frac{D^2 p_1}{11450 b} \cdot \frac{n}{\sqrt{n^2-1}}; \quad (7)$$

$$\text{Thickness of strap if of steel} = \frac{D^2 p_1}{17200 b} \cdot \frac{n}{\sqrt{n^2-1}}. \quad (8)$$

Formulæ (7) and (8) apply to that portion of the strap not cut away for the key and gib. The thickness there must be increased so as to give an effective cross-section equal to bt.

There is a shearing stress exerted upon the end of the arms of the strap beyond the slot for the key and gib. If the strap

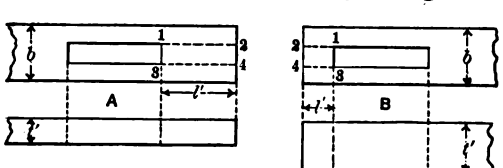

Fig. 142.

gives way here, it will fail in double shear along the lines 1, 2 and 3, 4 of A in Fig. 142.

Digitized by Google

Let the length 1, 2 be l' and the thickness of strap t', and the safe shearing resistance $= f = \frac{45000}{\text{factor of safety}}$ for wrought-iron, and $\frac{82000}{\text{factor of safety}}$ for steel; the length l' may be found from

$$l' = \frac{bt}{2ft'} \quad . \quad . \quad . \quad . \quad . \quad . \quad . \quad . \quad . \quad (9)$$

The same method will apply in designing the length l', of the line 1, 2, for the stub end of the connecting-rod shown at B in Fig. 142,

$$2ft'l' = T = \frac{n}{\sqrt{n^2 - 1}} \frac{\pi}{4} D^2 p_1.$$

The thickness of the end t' is assumed (knowing the diameter of the journal and the thickness of the brasses or boxes), so that

$$l' = \frac{1.5708 D^2 p_1}{ft'} \cdot \frac{n}{\sqrt{n^2 - 1}}. \quad . \quad . \quad . \quad . \quad (10)$$

The *breadth of the keyway* is generally one fourth of the width of the strap, and the *length* is always great enough to allow a shearing section of the key and gib equal in strength to the tensile strength of a section of the straps. The *taper of the key* is about $\frac{5}{8}$ in. to the foot.

DONALDSON gives the following empirical rules for designing the ends of the connecting-rod:

Referring to Fig. 140, let

D = diameter of pin or journal;

D' = thickness of brass $= \frac{D}{10} + 0.15$;

B = thickness of brass at sides $= \frac{7}{8} D'$;

C = depth of butt end $= D + 2B$;

Digitized by Google

E = thickness of strap at brasses = $0.4D$;
Section of strap = $\frac{2}{5}$ area of D;
F = thickness of straps at butt = $0.43D$;
Section of strap at butt = $\frac{1}{2}$ area of D;
G = thickness of strap at end = E;
$H = \frac{1}{2}D + B + E$;
$J = \frac{1}{2}D + B + F$;
K = end of butt at brasses = $0.36D$;
L = combined width of key and gib = D;
M = thickness of key or gib = $\frac{D}{5} + 0.06$;
N = end of strap = $\frac{D}{2} + 0.4$;
O = section of rod = area of D.*

The size of the "brasses" or "boxes" must first be determined upon in any case of connecting-rod design. Their form and size will depend upon the duty of the engine and the material used. White metal and other semi-anti-friction compositions are extensively used for the wearing surfaces of the brasses. In large engines the brasses are usually cast cellular. For the size of the journal see Chapter XI.

Other forms of connecting-rods are shown in Figs. 143, 144, and 145. Fig. 143 is made so that the connecting-rod can be entirely removed by taking off the side cap. This rod is used on the Barney and Kilby Standard Engine.

Fig. 144 is a form of connecting-rod† designed by Mr. W. F. Mattes, of Scranton, Pa. The boxes are secured by jaws forged with the rod. The cap has shoulders projecting over the ends of the jaws to prevent their spreading. Either through-bolts or stud-bolts may be used. The wear may be taken up with liners or with a movable block similar to those used in Fig. 143.

---

* Donaldson makes breadth of strap, parallel to the crank-pin, equal to the width marked *O* in Fig. 140.

† *Trans. Am. Soc. Mech. Engrs.*, vol. ix. p. 467.

Digitized by Google

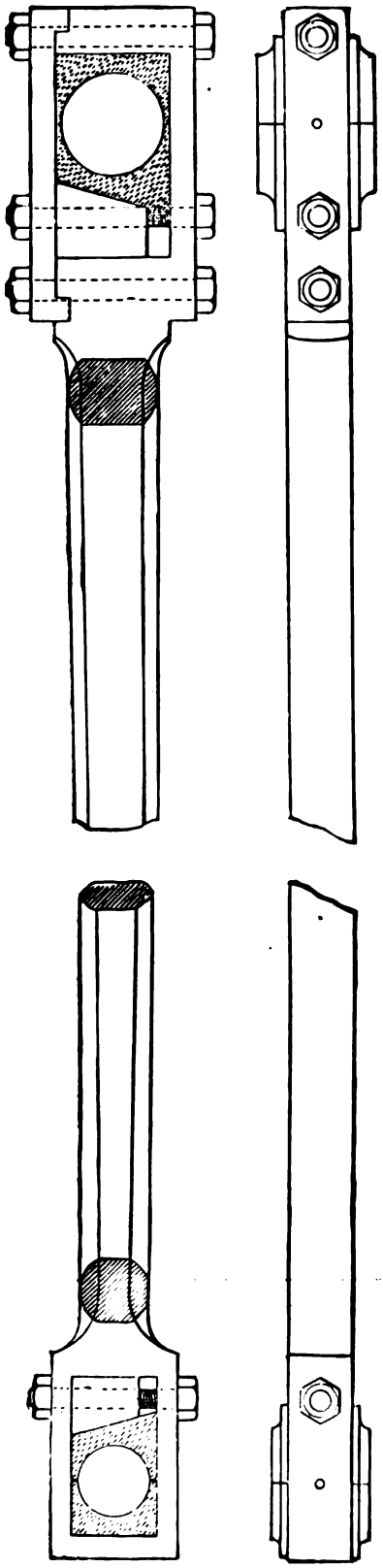

Fig. 143.

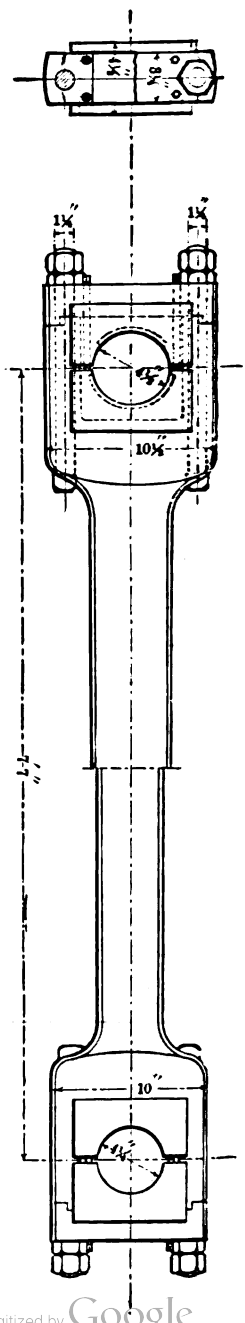

Fig. 144.

Digitized by Google

Fig. 145 illustrates the connecting-rod of the Woodbury engine, and is made of either a "Metis" wrought-iron or a steel

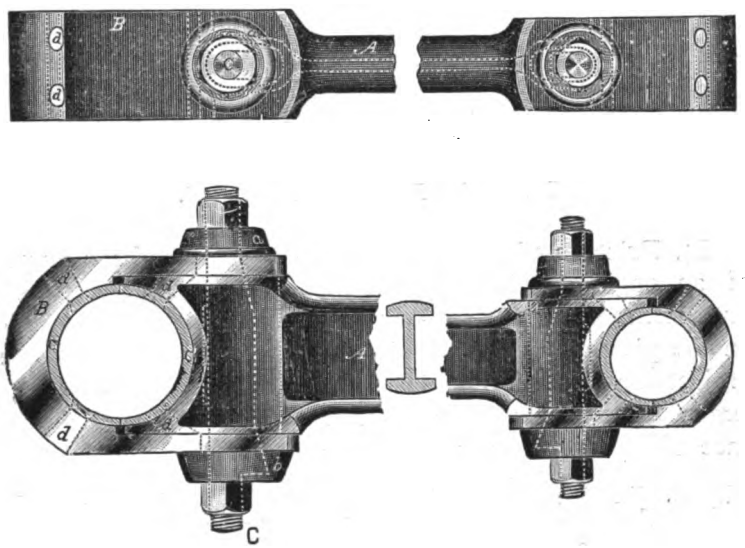

Fig. 145.

casting. The body of the rod is of I section, and gives greatest stiffness with least weight. The other details are distinctly shown in the figure.

Digitized by Google

CHAPTER XI.

DESIGN OF THE CRANK-PIN.

84. Friction of the Crank-pin.—There is perhaps no part of an engine so imperfectly understood as the crank-pin. Authorities differ as to the mode of application of the stress on the piston to the revolving shaft. Some claim that the projected area of the pin, i.e., its length times the diameter, is larger than the bearing-surface. Again, there is great difference of opinion as to the value of the coefficient of friction between the rubbing-surfaces, some claiming that 0.05, as determined by Gen. Morin, is too large or too small. Experimental results vary, on account of the difference in the pressure applied, condition of the rubbing-surface, velocity, and unguent used.

The designer must not assume that the conditions governing a like engine during a certain performance will govern his engine, for frequently the shaft is out of line, dirt works in between the rubbing-surfaces, the boxes work loose, the pin becomes heated, and the brasses nip. He must design his engine to work well under the most unfavorable circumstances.

The materials used for the boxes vary. Brass was used exclusively until recent years. Now the boxes are usually made of brass lined with white metal. The proportions given in the table of alloys on the following page will give satisfaction.

The journal is generally made of wrought-iron, but sometimes of steel. The latter is more homogeneous in structure, harder, and has a smoother surface than wrought-iron.

The value of the coefficient of friction for the crank-pin journal is a matter of speculation. The stresses exerted upon this journal are not as uniform as those for the shaft-journals.

Digitized by Google

TABLE OF ALLOYS.

ALLOYS.	Tin.	Copper.	Zinc.	Anti-mony.	Lead.	Iron.
White metal for bearings.....	10	1	.....	1	....	...
" " " "	16	2	.....	2	....	...
" " " "	41	0.25	.....	11	48	...
" " " "	63	2	.....	2	35	...
" " " "	32	4	62	..	1.1	0.6
Brass for engine-bearings.....	13	112	0.25	..	....	...
" tough, for engine-work.....	15	100	15	..	....	...
" " " heavy bearings... ...	25	160	5	..	....	...
" yellow, for turning	..	2	1	..	...	...
" flanges to stand brazing.....	..	32	1	..	1	...
" locomotive bearings.....	7	64	1	..	....	...
" for straps and glands.....	16	130	1	..	....	...
" " U. S. naval bearings.	1	6	0.25	..	....	...
Babbitt metal.....	10	1	.....	1	....	...

Prof. R. H. Thurston has contributed more to the literature of this subject than any one, and after an exhaustive series of experiments with cool, well-lubricated shaft-journals turning at velocities ranging from 100 to 1200 ft. per min., and with pressures ranging from 4 to 200 lbs. per sq. in. of projected area, he concluded that the value of the coefficient varies with the materials used, and directly with the fifth root of the velocity and inversely with the square root of the pressure, or

$$\text{Coefficient of friction} = \frac{a\sqrt[5]{v}}{\sqrt{p}}.$$

Here a = a constant ranging from 0.02 to 0.03 for steel journals and bronze boxes; v = velocity of rubbing-surface in feet per minute; p = pounds pressure per sq. in. of projected area.

In order to use this value for the coefficient of friction we must assume (1) that it is applicable to a crank-pin journal, and (2) that it holds good for pressures greater than 200 lbs. per sq. in. of projected area—say for 500 lbs. There is an entire absence of experimental data concerning the usual conditions of modern marine practice. All that we can do is to follow successful practice, which will of course result in a want of progress and compel us to work empirically. To illustrate: The

Digitized by Google

formula above would give a value of 0.006 for the coefficient of friction for a ten-inch pin making 60 revolutions per minute, and having a mean pressure of 500 lbs. per sq. in. of projected area. This result will probably answer for a crank-pin journal under the *most favorable conditions;* but since we are to design the pin for use under *all conditions*, it will be too small a value. So that we can only adopt the usual value for the coefficient of friction for bearings, or 0.05.

The following table by the Author, published in *Journal Frank. Inst.*, March 1883, illustrates the work of friction per sq. in. of projected area of crank-pin for several modern screw-propeller engines. It is generally conceded that a crank-pin that works well for a propeller-engine will run cool for a paddle or stationary engine. In column (8) the average velocity of rubbing-surfaces for ten crank pins is 327 ft. per min. The work of friction per sq. in. of projected area of ten crank-pins is given in column 10 as 5086.6 foot-pounds per min., or $(12 \times 5086.6) = 61039.2$ inch-pounds per min. The pressure per sq. in. of projected area is 365.41 lbs. The work of friction transmuted into heat-units per hour per sq. in. of projected area is 387.1.

Column.....	1	2	3	4	5	6	7	8	9	10	11
NAME OF VESSEL.	Diameter of cylinder in inches.	Mean pressure per sq. in. on piston in pounds.	Total pressure on piston in pounds.	No. of strokes per minute.	Length of crank-pin in inches.	Diameter of crank-pin in inches.	Square inches of projected area of crank-pin.	Velocity of rubbing surfaces of crank-pin, in ft. per minute.	Total work of friction of crank-pin in ft. pounds per min., the coefficient of friction being 0.05.	Work of friction per sq. in. of projected area of crank-pin in ft.-pounds per minute.	Pressure per sq. inch of projected area of crank-pin in pounds.
H. B. M. S. Alexandra.	70	23.0	88515.50	134	17.5	17.5	306.25	306.96	1358590	4436.2	289.03
" " "	90	14.0	89063.80	134	17.5	17.5	306.25	306.96	1366900	4463.3	290.82
" " "	90	14.0	89063.80	134	17.5	17.5	306.25	306.96	1366900	4463.3	290.82
" " Garnet....	57	26.0	66346.80	180	13	13	169	306.27	1016120	6012.5	392.58
" " "	90	10.2	16797.85	180	13	13	169	306.27	1023000	6053.2	395 25
" " Rover.....	72	37.0	150645.50	136	14	20	288	356.048	2681050	9578.4	538.02
" " "	88	12.0	72085.20	136	14	20	288	356.048	1299300	4640.3	260.66
" " "	88	10.5	63862.05	136	14	20	288	356.048	1136900	4060.3	224.50
" " Téméraire.	70	29.0	111606.50	147.2	17.5	17.5	306.25	336.198	1876170	6126.2	364.43
" " "	114	11.0	112277.66	147.2	17.5	17.5	306.25	336.198	1887500	6163.2	366.62
Averages.....	...	....	.. ..	...	..	...	.. ...	327.000	... .	5086.6	365.41

Digitized by Google

85. Design of the Length of the Crank-pin to Avoid Heating.*—A crank-pin should be designed (1) to avoid heating, (2) for strength, (3) for rigidity.

CASE I. *Design of Crank-pin to Avoid Heating.*

Let l = length of crank-pin in inches;

d = diameter of crank-pin in inches;

ψ = coefficient of friction of surfaces;

P = total *mean* load on crank-pin in pounds (neglecting the influence due to angularity of connecting-rod)

$$= \frac{(\text{I. H. P.}) \times 33000}{2LR};$$

(I. H. P.) = indicated horse-power of engine;

L = stroke of piston in feet;

R = number of revolutions of crank-shaft per minute.

Then

Friction at the crank-pin $= \psi P$; . . . . . (1)

Work of friction during 1 revolution of crank-shaft $= \psi P \pi d$; . . . . (2)

Work of friction per minute $= \psi P \pi d R$; . . . (3)

Work of friction per sq. inch of projected area of crank-pin $= \frac{\psi P \pi d R}{ld} = \frac{\psi P \pi R}{l}$. (4)

But, from the table, the work of friction per sq. inch of projected area of the crank-pin may exceed 61000 inch-pounds per minute; hence

$$\frac{\psi P \pi R}{l} = 61000 = \frac{\psi \pi R}{l} \cdot \frac{(\text{I. H. P.}) \times 33000}{2LR}. \quad . \quad . \quad (5)$$

* This section and the one following are reproduced from a paper by the Author published in *The American Engineer*, June 6, 1888.

Digitized by Google

Reducing, and solving for l,

$$l = 0.9075 \frac{\psi(\text{I. H. P.})}{L} \quad \ldots\ldots\ldots \quad (6)$$

According to Prof. Marks, the value of l found from this formula may be reduced four times for side-wheel engines and ten times for locomotive or stationary engines.

From this it appears that the work of friction on a unit of projected area of the crank-pin is independent of the diameter of the pin (equation 4), and inversely proportional to the length. If the diameter is decreased the pressure on a unit of projected area of the crank-pin is increased, while the velocity of the rubbing-surface is decreased in the same proportion.

When the diameter has been determined upon, the length may be found by requiring the projected area to be large enough to withstand a certain pressure on each unit of projected area. From column 11, this pressure is 365 lbs. Of course the pressure may be increased as the velocity is decreased. It is well, if space is available, to have the pin as long as possible. The following values of the pressure on one square inch of projected area of the crank-pin are recommended, viz.:

500 lbs. for naval engines;
400 lbs. for merchant engines;
800 to 900 lbs. for paddle-wheel engines.

The proportions for ratio of length of journal to its diameter are given as follows by Prof. W. C. Unwin, for wrought-iron journals, viz.:

Revolutions of the shaft per minute.....	50	100	150	200	250	500
Ratio of length of journal to its diameter....	1.2	1.4	1.6	1.8	2.0	3.0

Prof. W. D. Marks recommends the following formula for the length of locomotive crank-pins:

Length in inches = its diameter = 0.013 (diam. of cylinder)^2.

Digitized by Google

86. Diameter of an Overhung Crank-pin.

CASE II. *Design of Crank-pin for Strength.*—We will first assume an *overhung* crank-pin. It is evident that the pin will be deflected somewhat, and most at its free end. Hence the load there will be zero, and greatest at the fixed end. The centre of pressure of the load on the pin will be $\frac{1}{3}l$ from the fixed end, as shown in Fig. 146 (Van Buren).*

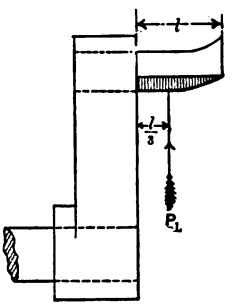

Fig. 146.

The diameter of a wrought-iron overhung crank-pin for *strength* will be found as follows:

Let P_1 = maximum unbalanced load on the piston in lbs.;

$$\text{Moment} = P_1\frac{l}{3} = \frac{f}{\frac{1}{2}d}\cdot\frac{\pi d^4}{64} = \frac{\pi}{32}\cdot fd^3.$$

Here f = transverse strength of wrought-iron = 36000 lbs. ultimate.

Allowing a factor of safety of 6, f = 6000 lbs. Then

$$P_1\frac{l}{3} = \frac{\pi}{32}\times 6000d^3;$$

$$d^3 = \frac{P_1 l\times 32}{18000\times\pi},$$

$$d = 0.0827\sqrt[3]{P_1 l}. \quad\ldots\ldots\quad (1)$$

In case the steam follows full stroke in the cylinder $P_1 = P$, and

$$d = 0.0827\sqrt[3]{\frac{l\times 33000\times(\text{I. H. P.})}{2LR}};$$

$$= 2.1058\sqrt[3]{\frac{l\times(\text{I. H. P.})}{LR}}. \quad\ldots\ldots\quad (2)$$

* On account of the "spring" of the brasses.

Digitized by Google

CASE III. *Design of the Crank-pin for Rigidity.*—In Fig. 140 allow a deflection of 0.01 in. at the free end, or $\frac{1}{300}$ in. at the centre of pressure. Then the diameter of the pin for *rigidity* is found as follows:

Take the origin at the fixed end of the crank-pin; then

$$EI\frac{d^2y}{dx^2} = P_1\left(\frac{l}{3} - x\right);$$

$$EI\frac{dy}{dx} = P_1\left(\frac{l}{3}x - \frac{x^2}{2}\right);$$

$$EIy = P_1\left(\frac{lx^2}{6} - \frac{x^3}{6}\right).$$

When $y = \frac{1}{300}$ in., $x = \frac{l}{3}$; therefore

$$\frac{EI}{300} = \frac{P_1 l^3}{6}\left(\frac{1}{9} - \frac{1}{27}\right) = \frac{P_1 l^3}{81}.$$

But $E = 28000000$ for wrought-iron and $I = \frac{\pi d^4}{64}$.

Hence

$$d = 0.405\sqrt[4]{P_1 l^3}. \quad . \quad . \quad . \quad . \quad . \quad . \quad (3)$$

Conclusions.—The length of the pin should be designed from formula (6) of § 85, and the diameter found by the use of formulæ (1) and (3) of this section. The largest diameter thus found should be accepted. This will ordinarily be found from (3).

These formulæ apply equally well to the design of the crank-pin for a single engine with double crank-arms (Van Buren).

87. Design of the After Crank-pin Diameter for a Two-cylinder Engine.—The greatest stress exerted upon the after crank-pin is evidently dependent upon the conditions governing the expansion of steam in the cylinders. Since the ratio of expansion is varied, within limits, at pleasure (either with an independent cut-off valve, use of the links in partial gear, or an

Digitized by Google

automatic governor), the stress may be safely assumed as having its maximum value in each cylinder simultaneously. Hence we will assume a maximum pressure $T\left(=\frac{\pi}{4}D^2p_1\right)$ acting on each crank-pin at the same time.

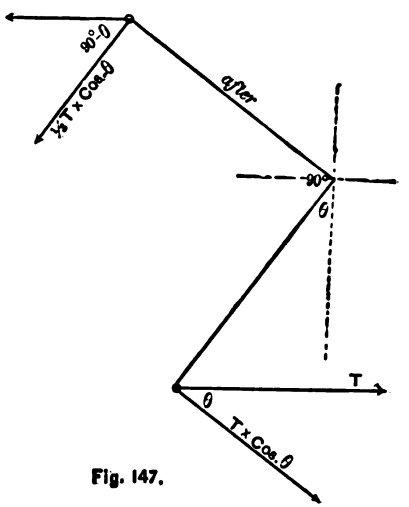

Fig. 147.

We will assume the cranks at right angles and in the positions indicated in Fig. 147.

There is a stress T acting at the forward end of the after pin due to the load on the piston of the first cylinder, and a load T acting at a distance of $\frac{1}{3}l$ from the after end of the second crank-pin. The load on the second crank-pin due to its own piston may be taken as $\frac{1}{3}T$ acting at the forward end of the length of the pin.

Hence the loads on the forward end of the second crank-pin are $\frac{T}{3}$ and $T\cos\theta$ acting at an angle of $90+\theta$ with each other. Their resultant, R, is the maximum stress on the forward end of the second crank-pin.

By trigonometry,

$$R^2=\frac{T^2}{9}+T^2\cos^2\theta-\tfrac{2}{3}T^2\cos\theta\cos(90+\theta)$$

$$=\frac{T^2}{9}+T^2\cos^2\theta+\tfrac{2}{3}T^2\cos\theta\sin\theta. \quad . \quad . \quad . \quad (A)$$

Differentiating, in order to get the value of θ corresponding to the maximum values of R, we have

$$\frac{dR}{d\theta}=-2\sin\theta\cos\theta+\tfrac{2}{3}\cos^2\theta-\tfrac{2}{3}\sin^2\theta=0.$$

Digitized by Google

Solving this quadratic,

$$\cos\theta = 0.9575 = \cos 16^\circ 46'.$$

Hence

$$R = 1.1\,T = 1.1\,\frac{\pi}{4}D^2p_1. \quad . \quad . \quad . \quad . \quad . \quad (1)$$

We will allow a deflection of $\frac{1}{100}$ in. at the forward end of the after crank-pin where the load is R. Then, as in § 86,

$$\frac{1}{100} = \frac{1.1\,\frac{\pi}{4}D^2p_1l}{3\frac{E}{f'}\cdot\frac{\pi d^4}{64}}.$$

Whence for *Rigidity*

$$\left.\begin{array}{l}\text{Diameter of the second or after}\\ \text{crank-pin in inches, if of wrought-}\\ \text{iron,}\end{array}\right\} = 0.068\sqrt[4]{f'D^2p_1l^2}, \quad . \quad (2)$$

where f' = factor of safety.

Comparing these formulæ with equation (3), § 86, we see that for *rigidity*

$$\text{Diameter of the}\ \frac{\text{after crank-pin}}{\text{forward crank-pin}} = 1.75\ \text{(nearly)}.$$

The two crank-pins are usually made the same size in marine practice.

Van Buren * considers the after crank-pin to be "very nearly in the condition of the half of a beam *fixed at the ends and loaded at the centre*." This will give for the moment of rupture

$$\frac{Rl}{2},$$

which is, as in Case I of § 86, also

$$\frac{\pi}{32}fd^3.$$

* *Van Buren's Strength of Iron Parts of Steam Machinery*, p. 20.

Digitized by Google

Hence

$$\frac{1.1}{2} \cdot \frac{\pi}{4} D^3 p_1 l = \frac{\pi}{32} f d^3 = \frac{\pi}{23} 5000 d^3.$$

Whence for *Strength*

$$\left.\begin{array}{l}\text{Diameter of the second, or after crank-}\\ \text{pin in inches, if of wrought-iron,}\end{array}\right\} = 0.095 \sqrt[3]{D^3 p_1 l}. \quad (3)$$

Comparing these formulæ with equation (1), § 86, we see that for *strength*

$$\text{Diameter of the } \frac{\text{after crank-pin}}{\text{forward crank pin}} = = 1.2 \text{ (nearly).}$$

88. Design of the After Crank-pin Diameter for a Three-cylinder Engine.—Reasoning as in § 87, Van Buren found that the total load on the forward end of the third or after crank-pin is $1.75R$. This gives—

For Strength,

$$\left.\begin{array}{l}\text{Diameter of after crank-pin in inches,}\\ \text{if of wrought-iron,}\end{array}\right\} = 0.112 \sqrt[3]{D^3 p_1 l}. \quad (1)$$

For Rigidity,

$$\left.\begin{array}{l}\text{Diameter of after crank-pin in inches,}\\ \text{if of wrought-iron,}\end{array}\right\} = 0.076 \sqrt[4]{f' D^3 p_1 l^3}. \quad (2)$$

Comparing the formulæ given in §§ 86, 87, and 88, we see that for *rigidity* the diameters of the crank-pin of the first, second, and third engines are as

$$1 : 1.75 : 2,$$

or

$$\tfrac{1}{2} : \tfrac{7}{8} : 1;$$

and *for strength* they are as

$$1 : 1.2 : 1.4,$$

or

$$\tfrac{5}{7} : \tfrac{6}{7} : 1.$$

Digitized by Google

On account of unknown strains produced in the after crank-pin it should always be as large as the shaft if possible. The foregoing discussion does not take into consideration the angularity of the connecting-rod, yet the maximum stresses on each piston are assumed to act simultaneously, which will amply provide for the increase in stress due to angularity.

The length of each crank-pin is the same, and is to be found from equation (1) of § 85.

The different methods used in making crank-pins are illustrated in the figures of the next chapter.

Digitized by Google

CHAPTER XII.

DESIGN OF THE CRANK-ARMS, CRANK, LINE AND PROPELLER SHAFTS, BEARINGS, AND COUPLINGS.

89. Design of the Crank-arm Eyes (Fig. 148).

CASE I. *Single Crank-arm.*—We will suppose that the crank-shaft is "built-up," and that the diameters of the crank pin and shaft are known.

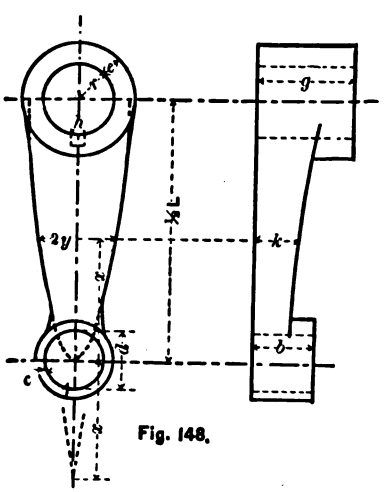

Fig. 148.

Let d = diameter of crank-pin in inches;

b = length of crank-pin eye in inches;

c = thickness of metal around crank-pin in inches;

$\frac{L}{2}$ = half-stroke of the engine = effective length of crank-arm in inches;

e = thickness of metal around the shaft in inches;

f' = factor of safety;

Digitized by Google

g = length of crank-hub in inches;
r = radius of the shaft in inches.

In case the crank-pin eye is sheared out there will be a double shear in the section bc, so that

$$2bcf = \frac{\pi D^2}{4} p_1,$$

where f = safe shearing strength of the metal used, or

$$\left(\frac{45000}{\text{factor of safety}} =\right) \frac{45000}{f'}.$$

Then

$$c = \frac{f' D^2 p_1}{114500 b}. \quad \ldots\ldots\ldots \quad (1)$$

It is usual, however, to make

$$b = 1.5d, \quad \ldots\ldots\ldots \quad (2)$$

and

$$c = \tfrac{1}{8}d, \quad \ldots\ldots\ldots \quad (3)$$

which gives a greater section of metal at the eye than (1). Formulæ (2) and (3) are recommended for all crank-pin eyes. In case b is reduced to d, c will be increased to $\frac{d}{2}$.

The greatest effort on the crank is evidently when the crank and connecting-rod are at right angles, provided the steam is not cut off before half-stroke. By referring to Fig. 115 and § 82, we see that

$$\frac{\pi}{4} D^2 p_1 \sec \phi = \frac{\pi}{4} D^2 p_1 \frac{\sqrt{n^2+1}}{n} = W$$

Digitized by Google

is the maximum effort on the crank-pin. If f = safe tensile strength of metal used $\left(= \frac{50000}{\text{factor of safety}} \text{ for wrought-iron}\right)$, we have, taking moments about the axis of the shaft,

$$W\frac{L}{2} = feg\left(r + \frac{e}{2}\right),$$

whence

$$e = \sqrt{\frac{LW}{gf} + r^2} - r, \quad \ldots \quad (4)$$

which is the thickness of the shaft eye in inches. The length g is usually equal to $2r$, or the diameter of the shaft, in which case e is about $\frac{3}{8}r$.

CASE II. *Crank-arms for a Double Engine.*—As shown in § 92, the greatest effort on the after crank-arm of the engine is $1.414W$, which is to be substituted for W in (4), while W becomes $2W$ for a three-cylinder engine with cranks at 120°. (See § 93.)

90. Design of the Crank-arms.—The shape of the wrought- or cast-iron crank-arm is shown in Fig. 148. On account of the low tensile strength of cast-iron, and the uncertainty of securing a good, sound casting free from inherent molecular strains, it is well never to use this material for cranks—certainly not for large cranks. Whenever crank-arms are made of cast-iron their cross-section is rectangular, semi-cruciform, or elliptical. If, however, the crank is a part of a large ribbed wheel, as in the Buckeye engine, Fig. 126, cast-iron answers very well.

Fig. 149 illustrates a similar form of crank, as applied to the Ideal engine. The crank pin and shaft are secured to the disk under hydraulic pressure. Here the metal is nowhere thick, so that a sound casting is assured, while strength is obtained by webbed and ribbed bracing. The centrifugal oil-feed shown in this figure is the best form known.

Fig. 150 illustrates the balanced, self-contained, wrought-iron crank-shaft of the Skinner engine. The crank-shaft is forged

Digitized by Google

solid. The counterbalance is a cast-iron disk mortised to receive the crank-arms.

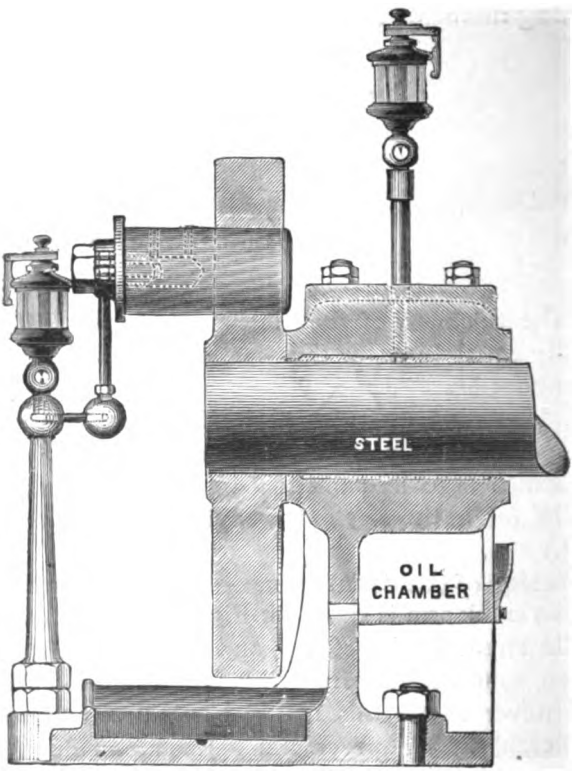

Fig. 149.

Fig. 151 illustrates the balanced crank-shaft of the Woodbury engine. The forged solid shaft is secured to the counterbalance by a U-bolt. This bolt has a varying shape, as shown at *D* in the two views. The disks can, of course, be easily removed if desired.

A form of built-up crank-shaft was designed by Turton for the SS. *Virginia*. The crank-pin and one half of each crank-arm form one forging, while a section of the shaft and

Digitized by Google

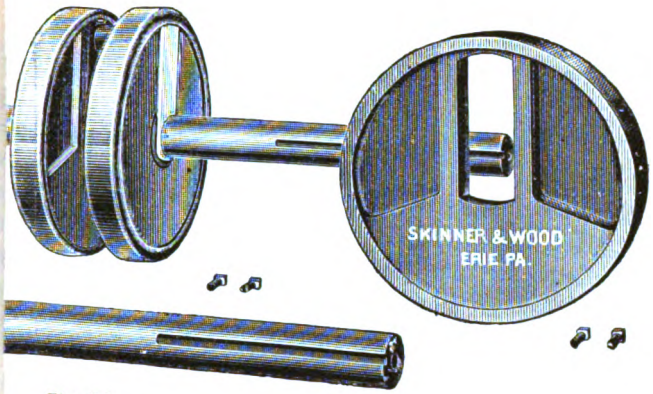

Fig. 150.

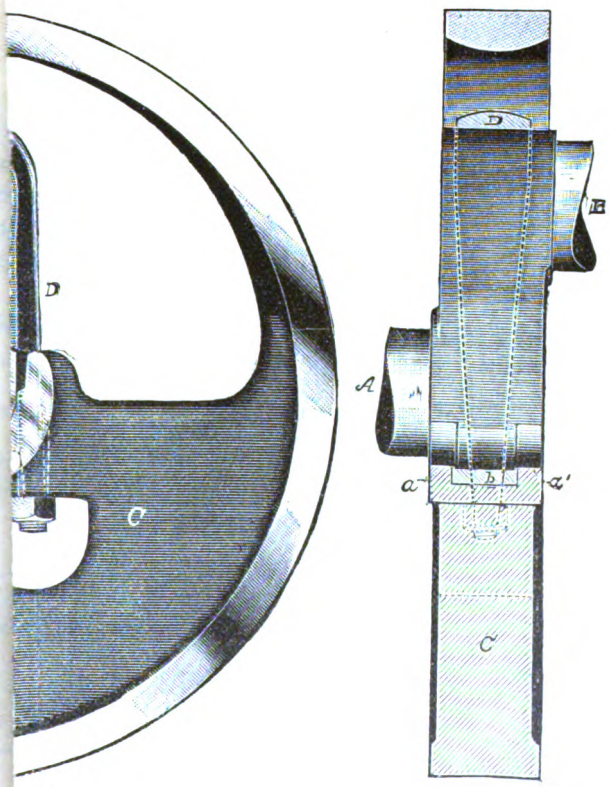

g. 151.

To face page 242.

Digitized by Google

Digitized by Google

the other half of the crank-arm form another forging. These are connected by a keyed dovetailed joint, and strengthened by two through-bolts. In case the crank-pin is not parallel with the shaft, this arrangement permits of adjustment. Fig. 155 is the crank-shaft of the U. S. S. *Galena*. It is a solid forging. The faces of the crank-arms are parabolic.

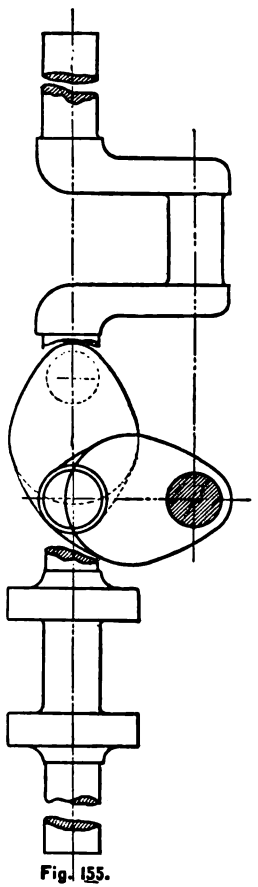

Fig. 155.

The crank-arm is equivalent to a beam fixed at the shaft end and loaded at the centre of the crank-pin with W. Hence *

$$Wx = \frac{fk(2y)^3}{6}, \quad . \quad . \quad . \quad (1)$$

where k = the thickness of the crank-arm parallel to the shaft, $2y$ = the variable width as shown in Fig. 148, x is the distance from the centre of the crank-eye to the width $2y$, and f is for the safe breaking-across strength of the metal used, or 5000 lbs. for wrought-iron.

The breadth k is generally constant, and equal to $\frac{3}{4}$ the shaft diameter. It may, however, be determined by limiting the value of $2y$ when $x = \frac{L}{2}$. This limiting value of $2y$ is usually $4k$, so that (1) becomes

$$k = \frac{\sqrt[3]{WL}}{30}. \quad . \quad . \quad . \quad . \quad . \quad . \quad . \quad . \quad . \quad . \quad . \quad (2)$$

Solving (1) for y,

$$y = \sqrt{\frac{1.5\,Wx}{fk}} = 0.0055\sqrt{\frac{W}{k}x}, \quad . \quad . \quad . \quad (3)$$

* See § 299, Rankine's *Applied Mech.*

Digitized by Google

which is the equation to a parabola with the vertex at the centre of the crank-pin eye. The curve may be easily drawn by finding simultaneous values of x and y, or by remembering that the tangent to this curve intercepts the axis of x at a distance x from the origin.

It is to be noted that $W = \frac{\pi}{4} D^2 p_1 \frac{\sqrt{n^2+1}}{n}$, or $\frac{\sqrt{n^2+1}}{n}$ times the maximum load on the piston. When there are two cylinders, the after crank-arm of the after engine is designed by (2) and (3) by making (see §§ 92, 93) $W = 1.414W$; and for a triple-engine, W becomes $2W$.

Equations (2) *and* (3) *apply equally well to "forged solid" and "built-up" crank-shafts.*

Keys for the crank-arm are to be designed by equation (1) of § 45.

91. Design of Crank-shaft for a Single Engine.

CASE I. *To Resist Torsion only.**

$$\text{Diameter of shaft} = \sqrt[3]{\frac{5.1M}{f}} \quad . \quad . \quad . \quad . \quad . \quad (1)$$

Here M = maximum moment of torsion

$$= \frac{\pi}{4} D^3 p_1 \frac{L}{2} \frac{\sqrt{n^2+1}}{n} = W \frac{L}{2};$$

and $f = 9000$, the safe shearing strength of wrought-iron.

CASE II. *To Resist Flexure only.*†

$$\text{Diameter of shaft} = \sqrt[3]{\frac{10.2M'}{f}} \quad . \quad . \quad . \quad . \quad (2)$$

Here M' = maximum bending moment, which is evidently at the beginning of the stroke, $= \frac{\pi D^2}{4} p_1 l$, where

l = distance, measured along the axis of the shaft, from the centre of the shaft-bearing to the centre of effort on the crank-pin.

* Rankine's *Applied Mech.*, § 321. † Ibid., § 295.

Digitized by Google

CASE III. *To Resist combined Torsion and Flexure.* (Analytical Solution.)

Let T = greatest twisting moment on the shaft due to the load on the piston;

M = greatest bending moment due to the load on the piston.

Then, by the principle of couples (§§ 57, 60, of Rankine's *Applied Mech.*), for an overhung crank-pin

$$\left.\begin{array}{l}\text{The equivalent twisting moment on the after journal is}\end{array}\right\} = M + \sqrt{M^2 + T^2}; \quad . \quad . \quad (3)$$

and for double crank-arms

$$\left.\begin{array}{l}\text{The equivalent twisting moment on the after journal is} = \dfrac{M}{2} + \sqrt{\dfrac{M^2}{4} + T^2}; \\ \text{The bending moment in the forward journal} = \dfrac{M}{2}\end{array}\right\}. \quad (4)$$

The values given in (3) and (4) are to replace M in eq. (1).

The following table by Prof. Seaton* gives the ratio between the greatest and mean twisting moments on the crank-shaft, it having been deduced by the methods illustrated in Chapter VII and Fig. 99. The inertia of the moving parts is neglected.

EXAMPLES.—Find the size of the parts of the high-pressure crank-shaft for the two-cylinder compound engine of the U. S. S. *Galena*, given I. H. P. = 1150, stroke 42 in., revolutions 65 per minute, cranks at 90°, steam is cut off at 0.55 stroke. See Fig. 155.

Solution of the Example.—Since the steam is cut off at 0.55 stroke, the ratio of the $\dfrac{\text{greatest}}{\text{mean}}$ twisting moment for the high-pressure engine = 1.907, from the table. The mean effort on the first piston, when the power is equally divided between the two cylinders, is $\left(\dfrac{33000 \times 11\frac{0}{2}5}{2 \times 65 \times 3.5} =\right)$ 41700 lbs.

* *Manual of Marine Engineering*, p. 161.

Digitized by Google

Kind of Engine.	Fraction of stroke completed when steam is cut off.	Ratio of maximum to mean twist.
Single-crank expansive	0.2	2.625
	0.4	2.125
	0.6	1.835
	0.8	1.698
	0.1	1.572
Two-cylinder expansive, cranks at 90°	0.2	1.616
	0.3	1.415
	0.4	1.298
	0.5	1.250
	0.6	1.270
	0.7	1.329
	0.8	1.357
Three-cylinder compound, cranks at 120°	H. P., 0.5; L. P., 0.66	1.40
Three-cylinder compound, with L. P. cranks opposite, and H. P. crank midway		1.26

The mean twisting moment of the first engine is $(41700 \times 21 =)$ 875700 inch pounds.

The greatest twisting moment is $(1.907 \times 875700 =)$ 1670000 inch-pounds. The greatest turning force on the high-pressure crank-pin is $\left(\frac{1670000}{21} =\right)$ 79520 lbs. Assuming the distance between the crank-shaft bearings to be 30 in., the greatest bending moment in each of the two forward journals* is $\left(\frac{79520 \times 30}{8} =\right)$ 298200 inch-pounds.

The forward journal is subjected to flexure only, so that eq. (2) is used, and

Diameter of the first or forward journal

$$= \sqrt[3]{\frac{298200 \times 10.2}{9000}} = 6.96 \text{ in.}$$

The after journal is subjected to flexure and twisting combined, and the equivalent greatest twisting moment is

$$298200 + \sqrt{298200^2 + 1670000^2} = 1994500 \text{ inch-pounds.}$$

* The double crank is a beam secured at its ends, of length 30 in., whose points of contra-flexure are $\frac{3}{4}\frac{0}{}$ in. from the end, hence the moment of flexure is $\frac{\text{load} \times \text{length of beam}}{8}$.

Digitized by Google

Hence

Diameter of after journal of high-pressure engine, eq. (1),

$$= \sqrt[3]{\frac{1994500}{9000}} \times 5.1 = 10.42 \text{ in.}$$

CASE IV. *To Resist combined Torsion and Flexure.* (Rankine's Solution.)—The following method of designing the diameter of a shaft subjected to both bending and twisting is given by Rankine.*

The effort on the crank-pin is one force of a right-handed couple whose arm is PS, Fig. 157, and the other force is, of course, at S, equal in magnitude and acting in an opposite direction. The moment of the couple is

$$M = P \times \overline{PS},$$

when P = maximum pressure on the crank-pin.

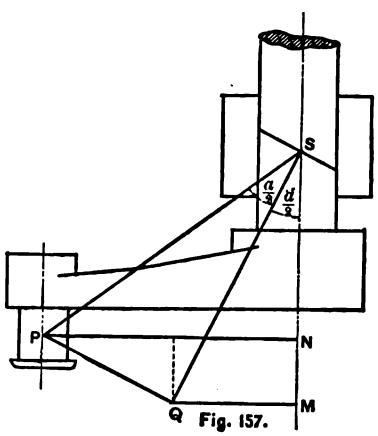

Fig. 157.

This couple may be resolved into two couples—

$$M \cos \alpha = P \times \overline{SN}, \text{ which is a } \textit{bending couple},$$

and

$$M \sin \alpha = P \times \overline{PN}, \text{ which is a } \textit{twisting couple}.$$

Bisect the angle α and draw PQ perpendicular to SQ. From Q draw QM perpendicular to MS.

"Calculate the diameter of the shaft as if to resist the bending action of P applied at M, and it will be strong enough to resist the combined bending and twisting action of P applied at the point marked P" (Rankine).

---

* § 325 of *Applied Mech.* and § 75 of *The Steam-Engine.*

Digitized by Google

To determine the length of $\overline{SM}$, we have

$$\overline{SQ} = \overline{PS}\cos\frac{\alpha}{2} \quad \text{and} \quad \overline{SM} = \overline{SQ}\cos\frac{\alpha}{2};$$

hence

$$\overline{SM} = \overline{PS}\cos^2\frac{\alpha}{2} = \overline{PS} \cdot \frac{1+\cos\alpha}{2}.$$

The moment of breaking across is

$$P \cdot \overline{PS} \cdot \frac{1+\cos\alpha}{2},$$

which is now to be substituted for M' in eq. (2). The distance $\overline{PS}$ is known after $\overline{NS}$ has been fixed.

92. Design of Crank-shaft for a Two-cylinder Engine.

CASE I. *To Resist Torsion only.*—We will neglect the influence of angularity of the connecting-rods and weight of the reciprocating parts, and suppose the equal forces P to be acting as in Fig. 158.

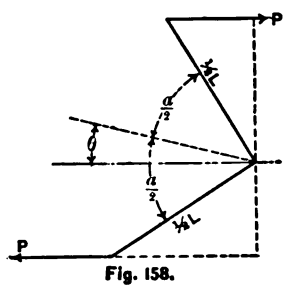

Fig. 158.

The moment of rotation is

$$M = P\frac{L}{2}\sin\left(\theta+\frac{\alpha}{2}\right) + P\frac{L}{2}\sin\left(\frac{\alpha}{2}-\theta\right)$$

$$= P\frac{L}{2}\left[\sin\theta\cos\frac{\alpha}{2} + \cos\theta\sin\frac{\alpha}{2} + \sin\frac{\alpha}{2}\cos\theta - \cos\frac{\alpha}{2}\sin\theta\right]$$

$$= 2P\frac{L}{2}\sin\frac{\alpha}{2}\cos\theta.$$

Digitized by Google

Differentiating to find value of θ for the greatest value of M,

$$\frac{dM}{d\theta} = 0 = \sin\theta, \quad \text{or} \quad \theta = 0° \text{ and } 180°.$$

If both cranks are on the same side of the line of centres,

$$M = P\frac{L}{2}\sin\left(\theta - \frac{\alpha}{2}\right) + Pr\sin\left(\theta + \frac{\alpha}{2}\right)$$

$$= 2P\frac{L}{2}\sin\theta\cos\frac{\alpha}{2},$$

and

$$\frac{dM}{d\theta} = 0 = \cos\theta, \quad \text{or} \quad \theta = 90° \text{ or } 270°.$$

Hence M is greatest when the bisector of the angle between the cranks is horizontal or vertical, that is, when the cranks are symmetrical with respect to their co-ordinate rectilinear axes.

The greatest value of the moment is $M = 2P\frac{L}{2}\sin\frac{\alpha}{2}$ when the cranks are on opposite sides of the line of centres, and $M = 2P\frac{L}{2}\cos\frac{\alpha}{2}$ when they are on the same side.

These expressions are equal when $\alpha = 90°$. They give a minimum value when $\theta = 45°$ (i.e., when one crank-pin is at a dead-point), and the greatest value when $\theta = 0°$ or $90°$. The greatest value of the moment for cranks at right angles is

$$M = 2P\frac{L}{2}\sin 45° = 1.414P\frac{L}{2}.$$

The diameter of the after part of the crank-shaft and the line-shaft *to resist a wrenching moment* is found by eq. (1) of § 91 by substituting $1.414M$ for M, or

$$\text{Diameter of shaft in inches} = 1.932\sqrt[3]{\frac{M}{f}},$$

where $M = \frac{\pi}{4}Dp_1\frac{L}{2}$, as in § 76, and $f = 8000$ to 9000 for wrought-iron.

Digitized by Google

CASE II. *To Resist combined Torsion and Flexure.*—We will proceed as in Case III of § 91.

Let M_1 = greatest bending moment on the shaft due to the load on the first or forward piston;
T_1 = greatest twisting moment due to same;
M_2 = greatest bending moment due to load on the second or after piston;
T_2 = greatest twisting moment due to same.

Then the twisting moment on the *forward* journal of the *after* crank, equivalent to the twisting moment T_1 and the bending moment $\frac{M_2}{2}$, is

$$\frac{M_2}{2} + \sqrt{\frac{M_2^2}{4} + T_1^2}.$$

On the *after* journal of the after crank the equivalent twisting moment is

$$\frac{M_2}{2} + \sqrt{\frac{M_2^2}{4} + (T_1 + T_2)^2}.$$

EXAMPLE.—Required the dimensions of the after part of the crank-shaft of the U. S. S. *Galena*, from the data given in the example and table under Case III, § 91 (see Fig. 155).

Solution.—The mean twisting moment of both engines is

$$\frac{33000 \times 1150}{2 \times 65 \times 3.5} \times 21 = 1751400 \text{ inch-pounds.}$$

Since the steam is cut off at 0.55 stroke, the ratio of the $\left(\frac{\text{maximum}}{\text{mean}}\right)$ twisting moment, from the table, is 1.263.

The greatest twisting moments of both engines is

$$1751400 \times 1.263 = 2{,}212{,}000 \text{ inch-pounds.}$$

The greatest turning force on the after crank-pin is

$$\frac{2212000}{21} = 105335 \text{ lbs.}$$

Digitized by Google

Assuming the distance between the centres of the crank shaft journals = 30 in., as before, we have—

The greatest bending moment on each of the two journals of the after crank is *

$$\frac{105335 \times 30}{8} = 395006 \text{ inch-pounds.}$$

The greatest equivalent twisting moment on the forward journal of the after crank is

$$\frac{M_2}{2} + \sqrt{\frac{M_2^2}{4} + T_1^2} = 395006 + \sqrt{395006^2 + 1670000^2} =$$

2,111,106 inch-pounds.

This value substituted for M in eq. (1) of § 91 gives

Diameter of forward journal of after crank

$$= \sqrt[3]{\frac{5.1 \times 2111106}{9000}} = 10.61 \text{ in.}$$

The greatest equivalent twisting moment on the after journal of the after crank is

$$\frac{M_2}{2} + \sqrt{\frac{M_2^2}{4} + (T_1 + T_2)^2} = 395006 + \sqrt{395006^2 + 2212000^2} =$$

2,642,006 inch-pounds.

This, when substituted in eq. (1) of § 91, gives

Diameter of the after journal of the after crank

$$= \sqrt[3]{\frac{5.1 \times 2642006}{9000}} = 11.44 \text{ in.}$$

The diameters of the four journals for the crank-shaft of the U. S. S. *Galena* should be, in inches,

* See foot-note to Case III, § 91.

Digitized by Google

6.96, 10.42, 10.61, 11.44.

If the diameters are made unequal in practice, they are made unequal in pairs, so that the diameters would be

10.42, 10.42, 11.44, 11.44 in.

93. Design of Crank-shaft for a Three-cylinder Engine —Cranks at 120°.

CASE I. *To Resist Torsion only.*—Let the forces be as represented in Fig. 159.

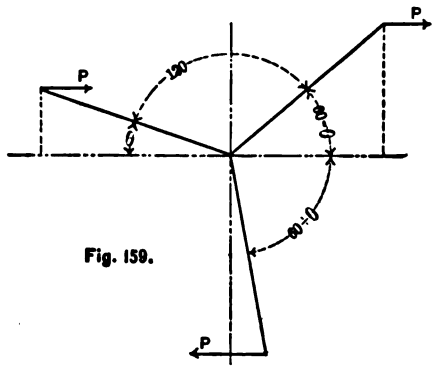

Fig. 159.

The moment of the crank-effort is

$$M = P\frac{L}{2}[\sin\theta + \sin(60 + \theta) + \sin(60 - \theta)]$$

$$= P\frac{L}{2}[\sin\theta + \sqrt{3}\cos\theta].$$

Differentiating to find the value of θ for the greatest value of M,

$$\frac{dM}{d\theta} = \cos\theta - \sqrt{3}\sin\theta = 0,$$

$$\tan\theta = \frac{1}{\sqrt{3}},$$

$$\theta = 30°;$$

whence

$$M = P\frac{L}{2}[\sin 30 + \sqrt{3}\cos 30] = 2P\frac{L}{2}.$$

Digitized by Google

We have for the greatest effort on the after crank

$$2P.$$

In eq. (1) of § 91 put $M = 2P\frac{L}{2} = PL = \frac{\pi}{4}D^2p_1L$, and solve for diameter.

CASE II. *To Resist combined Torsion and Bending.*—Besides the nomenclature of Case II, § 92, let

M_3 = greatest bending moment due to load on third or after piston;

T_3 = greatest twisting moment due to same.

Then the equivalent twisting moment on the *forward* journal of the third crank is

$$\frac{M_3}{2} + \sqrt{\frac{M_3^2}{4} + (T_1 + T_2)^2};$$

and the equivalent twisting moment on the *after* journal of the third crank is

$$\frac{M_3}{2} + \sqrt{\frac{M_3^2}{4} + (T_1 + T_2 + T_3)^2}.$$

The moments found by substitution in these expressions are to be substituted for M in eq. (1) of § 91, in order to determine the diameters of the journals.

94. Design of Crank-shaft for a Three-cylinder Compound Engine, with L. P. Cranks Opposite and H. P. Crank Midway.—The low-pressure cylinder for an engine of great power might be so large that it would be convenient to have two low-pressure cylinders aggregating the same power as the high-pressure cylinder. Then if P = the load on the high-pressure piston, $\frac{P}{2}$ is the load on each of the two low-pressure pistons, and the engine, so far as the crank moments

Digitized by Google

are concerned, is the same as the two-cylinder compound type. See § 92.

95. Design of the Line-shaft.

Let T = greatest torsional moment on the line-shaft;
M = greatest bending moment about a journal-centre due to weight of shaft, fly-wheel, coupling, pulley, etc.

Then, as in § 91, Case III,

The equivalent maximum twisting moment on this journal is

$$\frac{M}{2}+\sqrt{\frac{M^2}{4}+T^2}.$$

This expression replaces M in eq. (1), § 91, or

$$\text{Diameter} = \sqrt[3]{\frac{5.1\left(\frac{M}{2}+\sqrt{\frac{M^2}{4}+T^2}\right)}{f}} \text{ in.}$$

In case the mass producing flexure is at one third the length from the after bearing, $\frac{M}{2}$ is to be replaced by $\frac{M}{3}$, etc.

It is evident that if the working resistance, or force to be overcome, is at the end of a long shaft remote from the engine, the shaft diameter increases (theoretically) for uniform strength, as you go from the engine. In the case of a screw-propeller engine, the section of the shaft to which the propeller is attached will have a diameter greater than that of any other section whether we consider thrust or not.

96. Design of the Thrust or Propeller Shaft for a Marine Engine.—The propeller and thrust sections of the shaft of the *Galena* are shown in Fig. 160. The propeller shaft is tapered in the propeller. The shaft is protected from corrosion by a jacket of brass which is from $\frac{1}{4}$ to $\frac{5}{8}$ in. thick for shafts of various sizes. This jacket extends from the inside of the ship,

Digitized by Google

through the stuffing-box and stern-bearing and into the hub of the propeller for a short distance, as shown in Fig. 161.

In this figure is shown the manner in which the brass jacket is shrunk on to the propeller shaft. The jacket is put on in sections, *D*, *E*, of about one foot length, so as to make a scarf joint which is afterwards calked. The propeller shaft rests on longitudinal strips of lignum-vitæ, or other hard wood. These strips are cut so that the shaft bears against the ends of the grain of the wood, and they are dovetailed into a brass (or other metal) bushing, as shown in the section *BB*. There are two of these bushings, one at each end of the stern-bearing, the after section being longest. A brass washer, two or three

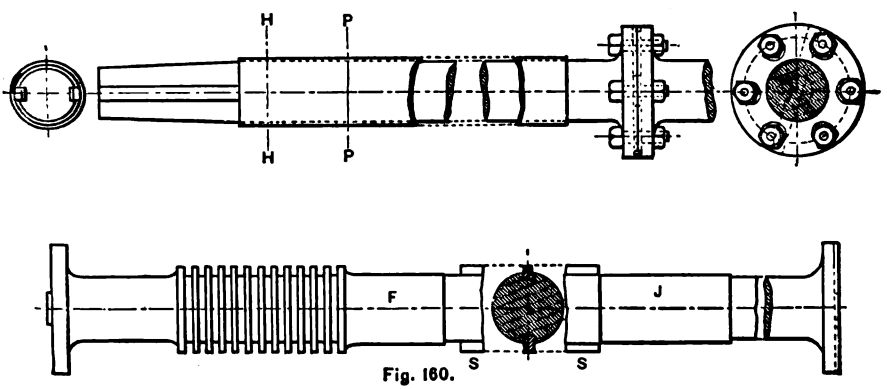

Fig. 160.

inches larger in internal diameter than the shaft, is represented as covering the ends of the lignum-vitæ strips. The washer is secured to the brass bushing by tap-bolts marked *A*, *A*, *A*. The bushing containing the strips fits into the stern-tube, which is made of cast-iron. The latter is always put in place from the inside of the ship.

The stern-tube, *X*, is represented as held in place by a large circular nut of wrought-iron, which is screwed on until the shoulder on the tube bears against the inside of the stern-post, and the flange at the inner end of the tube bears against the water-tight bulkhead, *KK*, to which it is bolted. The stuffing-box, *M*, is bolted to the stern-tube. The gland, *C*, is made in

Digitized by Google

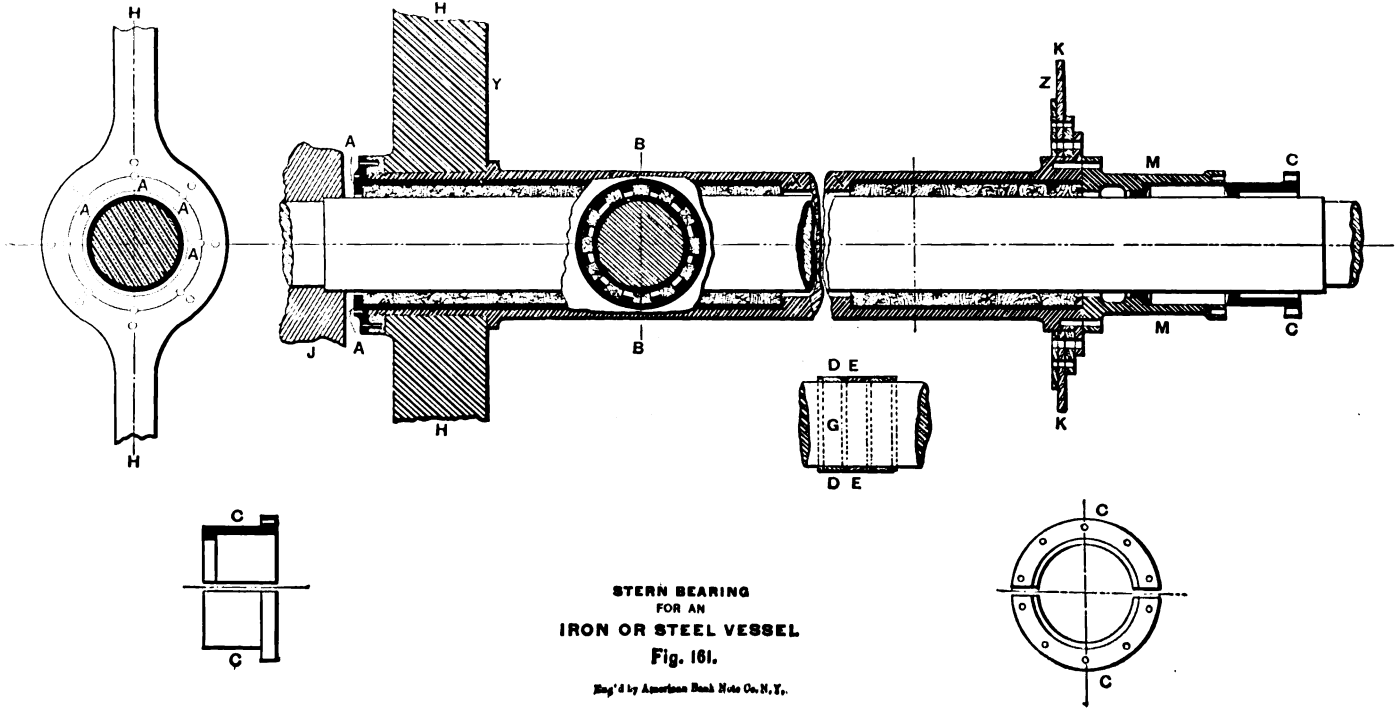

STERN BEARING
FOR AN
IRON OR STEEL VESSEL
Fig. 161.

Eng'd by American Bank Note Co. N. Y.

Digitized by Google

two parts, as shown. It is usual to allow a very small stream of water to flow out through the stuffing-box in order to insure a circulation of water through the bearing. Water is the lubricant used, and it is the best known for metal and wood. It passes between the strips of lignum-vitæ.

No fixed rules can be given for proportioning the parts of a stern-bearing. It is generally made much stronger than is thought to be necessary, yet many disasters occur on account of its failure. A steel casting would be an improvement over the cast-iron stern-tube. Successful practice is the very best guide in proportioning a stern-bearing.

The thrust-shaft shown in Fig. 160 is explained in § 98. We will now give rules for designing a propeller- or thrust-shaft.

CASE I. *To Resist combined Flexure and Torsion.*

Let T = greatest twisting moment on the crank-shaft;

W = weight of propeller in pounds;

L = the distance from the centre of gravity of the propeller to the stern-bearing in inches.

The greatest bending moment due to the weight of the screw is (assuming the centre of pressure of the stern-bearing to be at a distance L inboard from the aftermost edge of the stern-post)

$$2WL.$$

The twisting moment on the shaft equivalent to the greatest bending and twisting moments is

$$M = 2WL + \sqrt{4W^2L^2 + T^2},$$

which is to be substituted for M in eq. (1), § 91, or

$$\text{Diameter} = \sqrt[3]{\frac{5.1M}{f}}.$$

EXAMPLE.—Find diameter of propeller-shaft in the stern-bearing for the U. S. S. *Galena*, given data in Case II, § 92, weight of screw 9000 lbs., distance from centre of screw to stern-bearing is 20 in.

Digitized by Google

Solution.—The greatest twisting moment on the crank-shaft is 2212000 inch-pounds (from Case II, § 92).

The greatest bending moment is

$$2WL = 2 \times 9000 \times 20 = 360000 \text{ inch-pounds.}$$

The twisting moment equivalent to the combined greatest bending and twisting moments is

$$360000 + \sqrt{360000^2 + 2212000^2} = 2584982 \text{ inch-pounds.}$$

$$\text{Diameter of shaft} = \sqrt[3]{\frac{5.1 \times 2584982}{9000}} = 11.25 \text{ in.}$$

CASE II. *To Resist combined Torsion and Thrust.*—The indicated thrust in pounds on this shaft is

$$\frac{\text{mean load on pistons} \times 2 \text{ stroke in feet}}{\text{pitch of the screw in feet}} = \frac{33000 \text{ I. H. P.}}{PR},$$

where

I. H. P. = indicated horse-power;
P = pitch of screw in feet;
R = number of revolutions of the shaft per minute.

This value for the *mean* or indicated thrust must be multiplied by a constant from the table in Case II, § 91, p. 244, in order to obtain the *maximum* thrust.

The dimensions of the shaft to resist thrust only may be found from Euler's formulæ,

$$\left(\frac{\pi}{l}\right)^2 = \frac{T_1}{EI};$$

and to resist torsion only, by

$$\frac{\pi}{l} = \frac{T}{2EI}.$$

Digitized by Google

But when the shaft is subjected to combined thrust and torsion,*

$$\left(\frac{\pi}{l}\right)^2 = \frac{T_1}{EI} + \frac{T^2}{4E^2I^2}, \quad \text{(Greenhill,)}$$

in which

l = distance between centres of thrust and stern-bearings in inches;

E = modulus of elasticity of metal used = 28000000 for wrought-iron and 42000000 for steel;

I = moment of inertia of cross-section of shaft $= \frac{\pi}{64} d^4$;

d = diameter of shaft in inches;

T_1 = the *greatest* thrust on the shaft in pounds;

T = the greatest twisting moment in inch-pounds.

Substituting the values of I and E, and solving,

$$\text{Diameter} = 0.01385 \sqrt[4]{T_1 l^2 + l\sqrt{T_1^2 l^2 + 9.87 T^2}}.$$

97. Crank- and Line-shaft Bearings.—Crank-shaft bearings are usually made a part of the engine-frame. Figs. 91, 92, 126, 149, and 172 illustrate the bearings for marine engines. In each, arrangement is made for taking up the wear, by liners if not otherwise. Fig. 162 illustrates the crank-shaft bearings of the Russel & Co. engine, made in Massillon, O. One figure illustrates a bearing made into the engine-frame. In it the wear is taken up by a right or left movement of the brasses, using the movable block or the cap-bolts, while the bottom brass may be lined up. The other figure is a regular pillow-block permitting of adjustment in any direction. In each view the cap is secured by stud-bolts.

Crank-shaft bearings, which are not a part of the engine-frame, are similar to line-shaft bearings. Fig. 164 is such a bearing as is used on the Lane & Bodley Corliss engine. The bolts holding the pillow-block to the shoe-plate pass

* See *Engineering*, **33**, 349, and April 20, 1883; also p. 74 of Unwin's *Machine Design*.

Digitized by Google

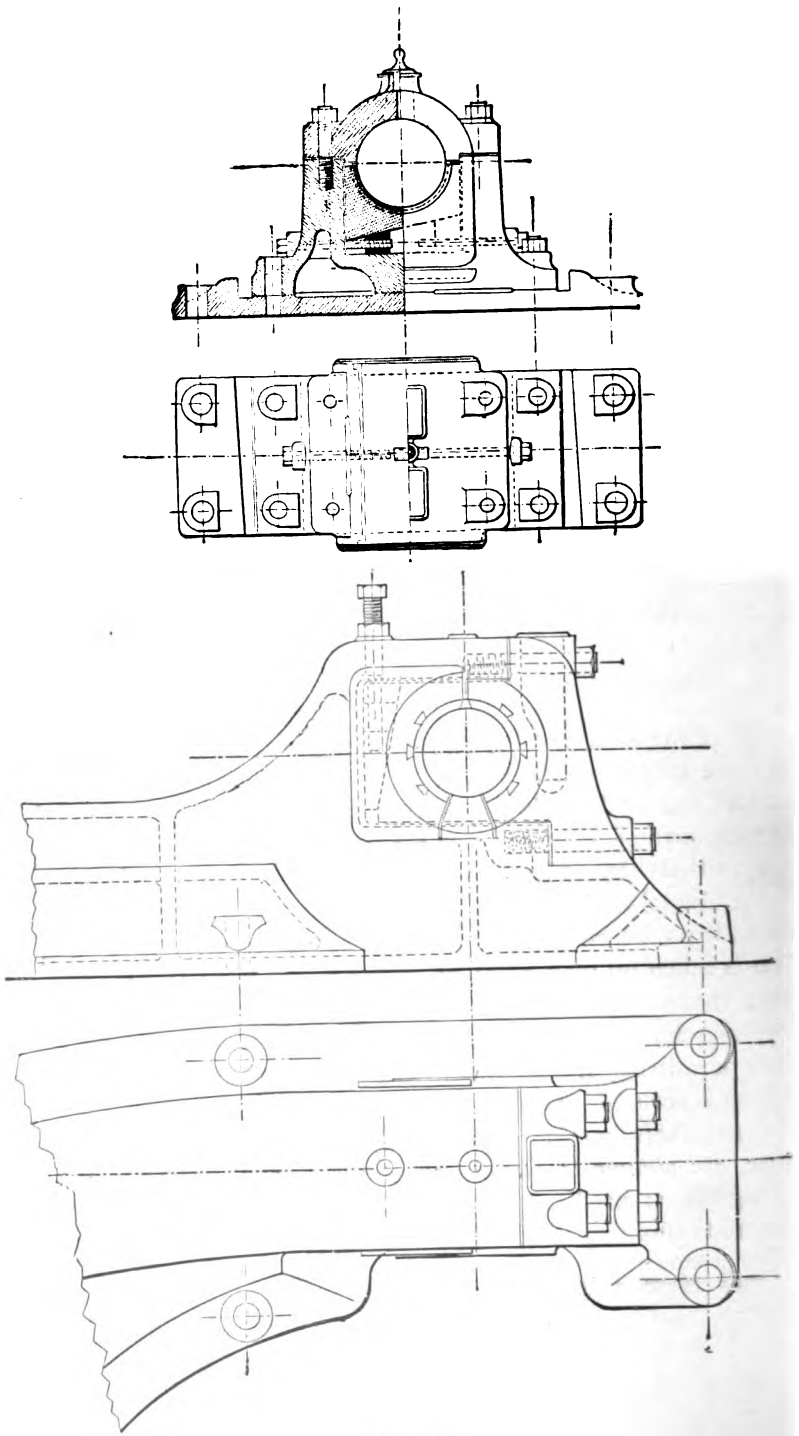

Fig. 162.

Digitized by Google

through oblong openings, so that by turning the side-screws the bearing can be moved laterally in order to align the shaft. The side-screws turn through lugs which are cast on the shoe-

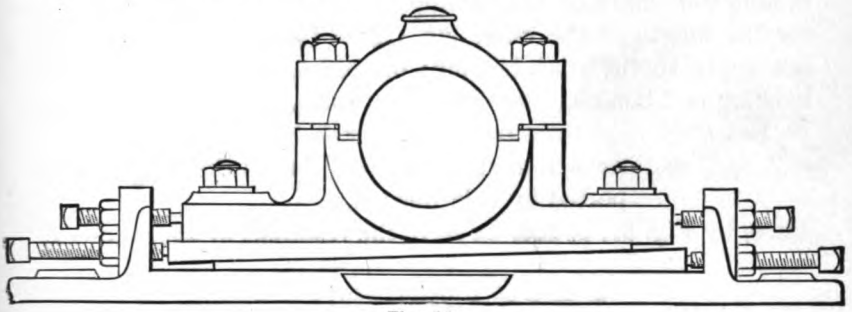

Fig. 164.

piece. The heads of the pillow-block bolts are pocketed in this shoe. Holding-down bolts pass through the shoe, securing it to the foundation.

Fig. 165 is a line-shaft pillow-block used on the *Galena*.

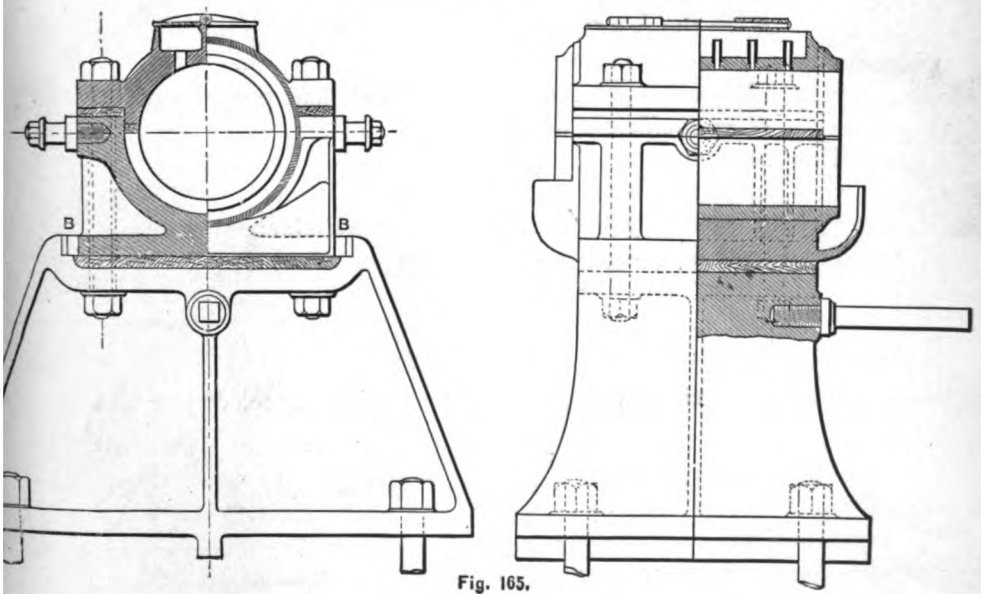

Fig. 165.

Digitized by Google

Lateral motion is obtained by wedges driven on either side, as shown at B. It is a very strong and compact pillow-block.

Prof. W. D. Marks gives* the following method of determining the length of the bearings. In § 85 we gave a formula for the length of the crank-pin. This formula will evidently not apply to the shaft-bearings on account of the combined twisting and bending moments upon them.

Let P = mean pressure on the piston in pounds;

Q = the reaction at the bearing due to the weight supported by it in pounds.

Then, by Fig. 82, p. 208, we have the resultant of these forces,

$$R_1 = \sqrt{P^2 + Q^2 + 2PQ\cos\alpha}.$$

For a horizontal engine $\alpha = 90°$, and $R_1 = \sqrt{P^2 + Q^2}$.

For a vertical engine $\alpha = 0°$ or $180°$, and $R_1 = P + Q$ and $P - Q$. } ...(1)

Let l = length of journal in inches;

d = diameter of journal in inches;

R_1 = the resultant force on the bearing in pounds from eq. (1);

R = number of revolutions of the shaft per minute;

f' = coefficient of friction.

Then, as in § 85,

Friction of journal $= f'R_1$ pounds.

Linear velocity of rubbing surface $= \pi dR$ inches per minute.

Total *work* of friction in inch-pounds per minute

$$= f'R_1\pi dR.$$

Work of friction on a square inch of projected area of journal is

$$= \frac{f'R_1\pi dR}{ld} = \frac{f'R_1\pi R}{l} \text{ inch-pounds.}$$

---

* § 53, Marks' *Relative Proportions of the Steam-Engine.*

Digitized by Google

Work of friction per square inch of projected area of journal from the table in § 84 is 61000 inch-pounds.
Hence

$$61000 = \frac{f' R_1 \pi R}{l},$$

and

$$\text{Length of shaft-journal in inches} = 0.0000515 f' R_1 R. \quad (2)$$

The length of the journal is from $1\frac{1}{4}$ to $1\frac{1}{2}$ times the diameter of the shaft.

98. Design of a Thrust-bearing for a Propeller Engine.—The thrust of the propeller-shaft is generally taken up by a bearing which is represented in Fig. 160 as being effected in another section of the shaft, called the thrust-section. Fig. 166 is the thrust-bearing for the *Galena*. The collars forged

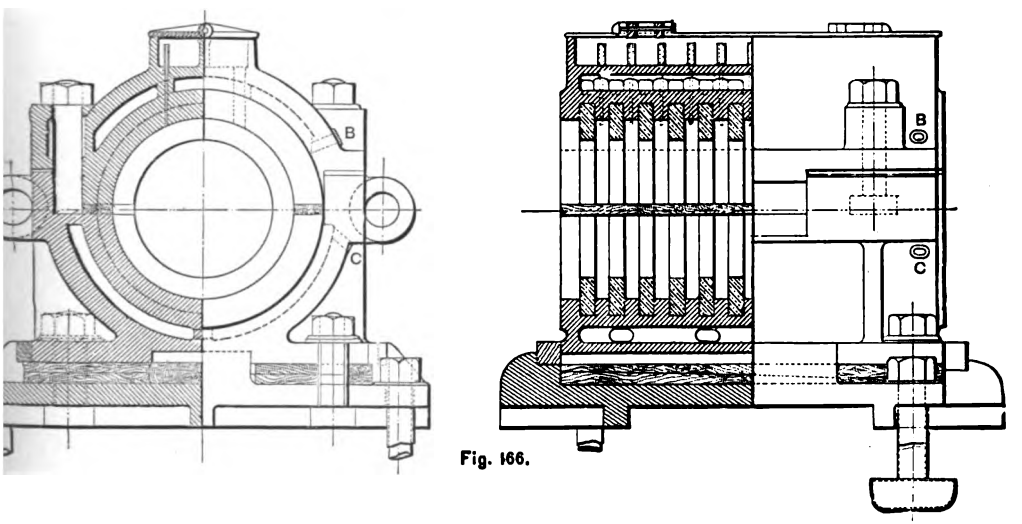

Fig. 166.

with the shaft in Fig. 160 fit into the recesses between the brass thrust-rings shown in Fig. 166. The brass thrust-rings fit into the cast-iron cap and pedestal. Water flowing through the stern-bearing of the ship circulates through the cap and pedestal, keeping the bearing cool. Its inlet is at *C*, and out-

Digitized by Google

let at *B*. This bearing is generally, though not always, placed at the end of the shaft-alley near the stern-bearing stuffing-box, so that the stern-bearing near one end and a line-shaft bearing near the other support the shaft, the thrust-bearing being used only for taking up the thrust.

Another form of thrust-bearing often used consists of a single thrust-collar, forged with the shaft, through which water circulates. This is a good design, though more bulky than that shown in Fig. 166.

In any thrust-bearing provision must be made for both longitudinal and lateral adjustment. This has been made in Fig. 166.

This bearing being somewhat inaccessible, hence neglected, should be designed with a large factor of safety. The thrust is usually taken upon a series of collars set concentric with the shaft.

Let r_1 = outer radius of the collar in inches;
r_2 = radius of the shaft in inches;
n = number of collars;
t = the thickness of each in inches;
P = total mean thrust or mean normal pressure on the collar in pounds;
p = pressure in pounds allowable on a square inch of thrust surface.

Then the thrust area of one collar is

$$\pi (r_1^2 - r_2^2),$$

and total thrust area is

$$n\pi (r_1^2 - r_2^2).$$

This is also equal to $\frac{P}{p}$, whence

$$\frac{P}{p} = n\pi (r_1^2 - r_2^2).$$

Digitized by Google

The value of p should not exceed 60 for high-speed engines exposed to all kinds of weather; hence

$$r_1 = \sqrt{r_2^2 + \frac{P}{60\pi n}} = \sqrt{r_2^2 + \frac{P}{188.5n}}. \quad . \quad . \quad (1)$$

The collars are subjected to a shearing force equal to P. If t = thickness of one collar in inches, the shearing section of one collar is

$$2\pi r_2 t \text{ square inches,}$$

and the safe shearing strength of this section, if of brass, is

$$2\pi r_2 t \times 1000 \text{ lbs.}$$

Hence

$$n \times 2\pi r_2 t \times 1000 = P; \quad t = \frac{P}{3283 n r_2} \text{ inches.}$$

The usual value of t in practice is $0.8(r_1 - r_2)$.

The space between the collars for solid brass rings is $= t$. When the brass rings are hollow, for water circulation, or when they are lined with white metal, the space between the collars is from 2 to $2\frac{1}{2}\,t$.

The number of collars used varies with the fancy of the designer. The greater the number used the smaller will be the radius, and there will be danger of bringing all the thrust on one or two collars. If only one or two collars are used the work of friction becomes greater, as the leverage of the friction of a collar-bearing is *

$$\frac{2}{3} \cdot \frac{r_1^3 - r_2^3}{r_1^2 - r_2^2}.$$

That the work of friction in this bearing is much greater than one would suppose, is shown by the following

EXAMPLE.—$P = 19875$ lbs.; $r_1 = 6$ in.; $r_2 = 5$ in.; coefficient of friction $= 0.05$; revolutions per minute $= 60$: required the work of turning the shaft.

---

* § 14, Rankine's *Steam-Engine*.

Digitized by Google

Here

$$r_1 = \tfrac{6}{12}\text{ ft., and } r_2 = \tfrac{5}{12}\text{ ft.,}$$

so that the friction leverage is

$$\frac{2}{3} \cdot \frac{216 - 125}{36 - 25} \times \frac{144}{144 \times 12} = \frac{1}{18} \cdot \frac{19}{11}.$$

Work of turning the shaft for one minute

$$= 2\pi \cdot \tfrac{1}{18} \cdot \tfrac{91}{11} \times 60 \times 19875 \times 0.05 = 171160 \text{ ft.-lbs.}$$

$$= 5.186 \text{ horse-power.}$$

99. Shaft-couplings.—A flange-shaft coupling is shown in Fig. 160. The flange is forged with the shaft section. In order to keep the sections in line, a cylindrical projection from the end of one section fits accurately into a recess in the other. The flanges are held together by through-bolts, while a key, resting with one half in each section, adds to the shearing resistance of the coupling. Three other forms of coupling are shown in Fig.

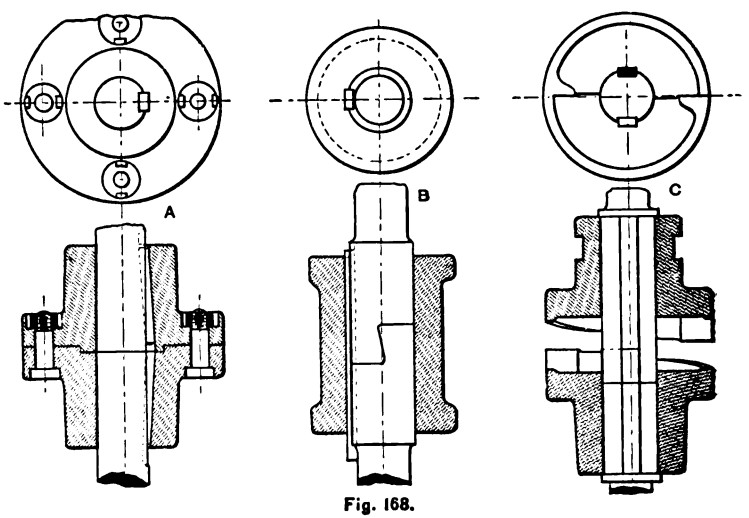

Fig. 168.

168. In *A*, two castings take the place of the flanges used in Fig. 160. The castings are keyed to the shaft and bolted to-

Digitized by Google

gether. In *B*, one casting covers the joint, and is keyed to the shaft. The two sections of shafting form a scarf-joint. In *C* is shown a helical disengaging coupling. The upper half slides over one section, being guided by a feather, as shown.

Fig. 169 is a drawing of a clutch-coupling used on the *Galena*. It is often desirable to disengage the engine and the propeller when under sail at sea. This device is used for that purpose. The section *A* is keyed to the shafting forward of the thrust-bearing, and at the place marked *F* in Fig. 160. Between this and the thrust-bearing is fastened a large wheel, around which passes a friction-brake, shown in Fig. 170. We will suppose that the ship is under sail with the shafts disconnected, and that it is desired to connect them. The friction-brake is used for stopping the rotation of the propeller, after which the sliding-clutch marked *B* in Fig. 169 is moved aft (along *SS* in Fig. 160) until it engages with the fixed clutch. The sliding-clutch is moved by the use of the wrought-iron collar *D*, Fig. 169, which is fitted to the groove *C*. The bearing faces of the clutches are covered with strips of brass. The

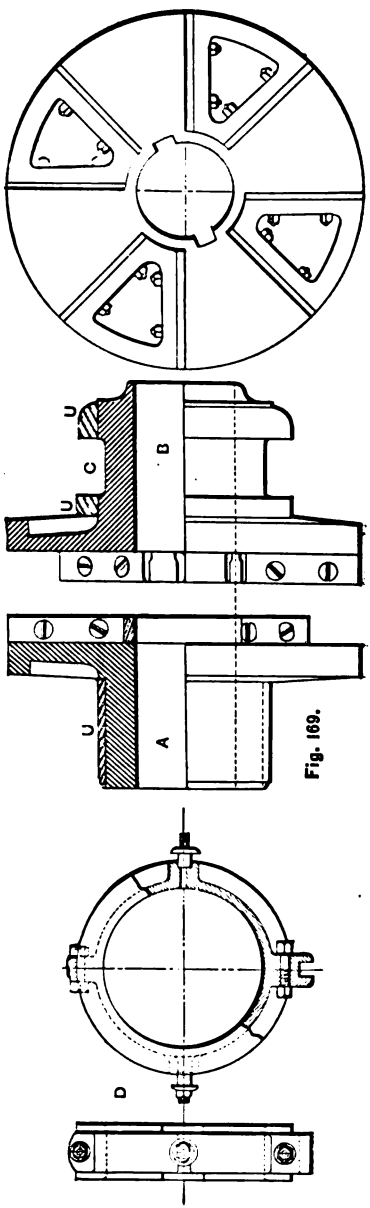

Fig. 169.

Digitized by Google

fixed and movable clutches are of cast-iron bound with wrought-iron bands, as shown at *U*, *U*, *U*.

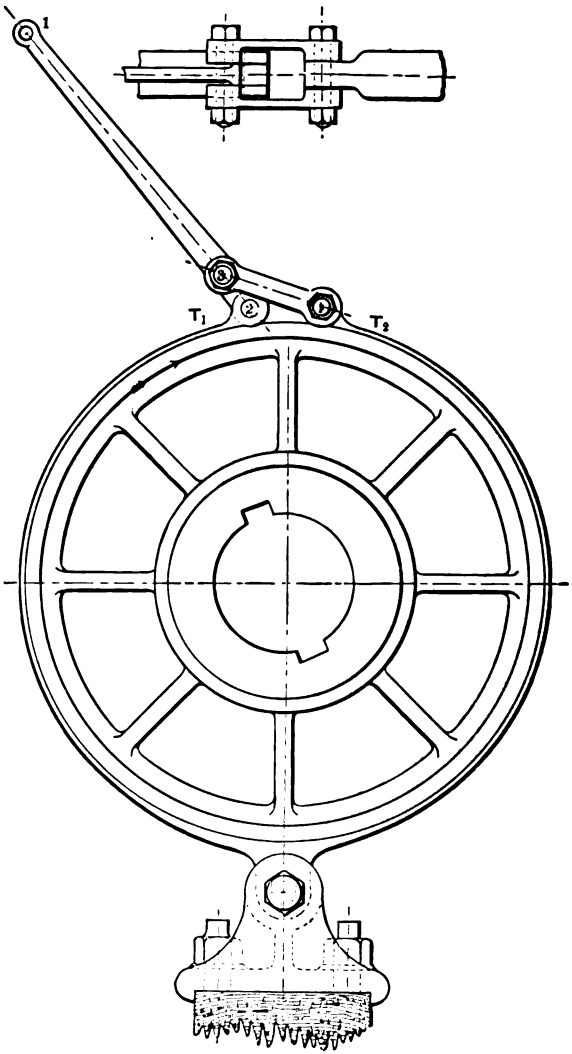

Fig. 170.

An example of the use of the friction-brake shown in Fig. 170 is given at the end of this section.

Digitized by Google

Shaft-couplings are usually subjected to only a torsional moment. The couplings are generally forged with the shaft.

Let r = any radius of the coupling subjected to a torsional moment, in inches;

t = thickness of coupling at r in inches;

f = safe strength of the material at the section whose area is $2\pi rt$ in pounds per square inch;

M = the greatest torsional moment on the shaft in inch-pounds;

d = diameter of shaft in inches;

d_1 = diameter of the coupling at bolt-holes, or usually $1.6d$;

D = diameter of the coupling (outer) in inches;

n = number of bolts used, of diameter = d_2 inches.

Then, from Case I, § 91,

$$M = f\frac{d^3}{5.1} = 2\pi rtfr, \text{ since the arm is } r,$$

whence

$$t = \frac{d^3}{32r^2}. \quad . \quad . \quad . \quad . \quad . \quad . \quad . \quad . \quad . \quad (1)$$

The thickness of the coupling at the circumference of the shaft, i.e., when $r = \frac{d}{2}$, is

$$t = \frac{d}{8}. \quad . \quad . \quad . \quad . \quad . \quad . \quad . \quad . \quad . \quad (2)$$

From eq. (1) it appears that t is decreased as r is increased, and if the coupling flange is designed for uniform strength, its surface would be a paraboloid of revolution. But in practice it is usual to have a uniform thickness for the flange, and $\frac{d}{8}$ is used.

The thickness of the flange at the bolt-holes may be determined as follows:

Digitized by Google

Effective circumferential section of flange at bolt-holes

$$= \pi d_1 t - n d_2,$$

and its moment is

$$= (\pi d_1 t - n d_2)\frac{d_1}{2}.$$

Equating equal moments as before,

$$f(\pi d_1 t - n d_2)\frac{d_1}{2} = M = f\frac{d^3}{5.1},$$

whence

$$t = \textit{thickness of flange at bolt-holes} = \frac{d^3}{8 d_1^2} + \frac{n d_2}{\pi d_1}. \quad . \quad (3)$$

Thus, if $d = 10$ in., $d_1 = 16$ in., $n = 6$, $d_2 = 2$ in., the thickness of the flange at the shaft is $\frac{10}{8} = 1\frac{1}{4}$ in., and at the bolt-holes it is $\frac{10^3}{8 \times 16^2} + \frac{6 \times 2}{\pi \times 16} = \frac{7}{8}$ in. (nearly).

In practice the thickness of the flange coupling is greater than obtained by these formulæ, it seldom being less than 0.3 diameter of the shaft.

The diameter of the bolts, whose number is n, is obtained as follows:

Shearing strength of all the bolts is

$$n\frac{\pi d_2^2}{4} f.$$

Moment of the shearing strength of the bolts is

$$n\frac{\pi d_2^2}{4} f\frac{d_1}{2},$$

which is also equal to the greatest torsional moment on the shaft, or

$$n\frac{\pi}{4} d_2^2 f\frac{d_1}{2} = M = \frac{f d^3}{5.1},$$

Digitized by Google

whence

$$\textit{Diameter of coupling bolt} = d\sqrt{\frac{d}{2nd_1}} \text{ in.} \quad . \quad . \quad (4)$$

If $d_1 = 1.6d$,

$$\text{Diameter of coupling bolt} = \frac{d}{1.788}\sqrt{\frac{1}{n}} \text{ in.} \quad . \quad (5)$$

EXAMPLE ON FRICTION BRAKES.—Given a pair of simple engines coupled at 90°; area of each piston 1000 sq. in.; stroke of piston 3 feet; mean effective pressure in each cylinder is 50 lbs. per sq. in.; the flexible brake shown in Fig. 170 covers $\frac{9}{10}$ of the circumference of the wheel, which is five feet in diameter. If the coefficient of friction between the steel band and wheel is $\frac{3}{10}$, find the tensions on the ends of the band.

By § 678 of Rankine's *Applied Mech.*, if the wheel turn in the direction of the arrow, the tensions T_1 and T_2 are found by the equation $T_1 = T_2 \times 10^{2.7288fc}$, when f = coefficient of friction, and c = ratio of $\frac{\text{arc covered by band}}{\text{whole circumference}}$.

By § 92 the mean total effort exerted on the after crank-pin is

$$50 \times 1000 \times 1.41 = 70500 \text{ lbs.},$$

which acts through an arm of 1.5 feet, making the greatest tension of the band (T_1),

$$\frac{1.5}{2.5} \times 70500 = 29375 \text{ lbs.} = T_1.$$

Hence

$$T_2 = \frac{29375}{10^{2.7288 \times 0.3 \times 0.9}} = 5385 \text{ lbs.}$$

Let the arm 1, 2 in Fig. 170 be 48 in. and 3, 2 be 2 in.; then the mechanical advantage is $\left(\frac{48}{2} = \right) 24$, so that the power to be exerted at the end 1 of the lever 1, 2 is

$$5385 \div 24 = 224.4 \text{ lbs.},$$

which is applied through a tackle and block.

Digitized by Google

Suppose a block is pressed up against the rim of the band wheel, the band being removed. The system is then called a *block-brake.*

A fixed arm contains the fixed nut through which a threaded stem passes. At the ends of the stem are a hand-wheel and friction-block respectively. Let the hand-wheel be 24 in. in diameter, and the pitch of the screw thread $\frac{1}{4}$ in. Then since the power acts through an arm of 12 in., and the resistance on the rim of the wheel is $\frac{3}{10} \times 29375$, we have, from the known mechanical advantage of the screw,

$$\pi 24P = 29375 \times \tfrac{3}{10} \times \tfrac{1}{4},$$

and the power exerted is

$$P = 28.5 \text{ lbs.}$$

This form of the brake is sometimes used on steam-engines.

100. Size of Shafting as decided by the Board of Trade, England.—*For a compound engine with two cylinders:*

$$\text{Diameter of shaft in inches} = \sqrt[3]{\frac{d^2P + 15D^2}{f}} \times C,$$

when d = diameter of the high-pressure cylinder in inches;
D = diameter of the low-pressure cylinder in inches;
P = boiler-pressure of steam in pounds per square inch;
C = length of crank in inches;
f = constant from following table.

For ordinary condensing engines, with two cylinders, when the pressure is not low:

$$\text{Diameter of shaft in inches} = \sqrt[3]{\frac{2PD^2C}{f}},$$

where D = diameter of the cylinder in inches;
P = boiler-pressure of steam in pounds per square inch;
C = length of crank in inches;
f = constant from following table:

Digitized by Google

Constant.	Angle between Cranks.	For Cranks and Propeller-shafts.	For Line-shaft.
f	90°	2468	2880
f	100°	2279	2659
f	110	2131	2487
f	120	2016	2352
f	130	1926	2248
f	140	1858	2168
f	150	1806	2108
f	160	1772	2068
f	170	1752	2045
f	180	1746	2037

101. Practical Rules for Size of Shafting.*—The following formulæ are adapted from Mr. D. K. Clark, for round shafting only:

Let D = transverse deflection in inches;
W = weight in pounds;
L = distance centre to centre of bearings in feet;
d = diameter of shaft in inches;
D' = angular deflection in degrees;
W' = twisting force in pounds;
R = radius of force in feet;
L' = length of shaft between couplings in feet.

Torsional Strength of Shafting:

Cast-iron..... $W' = \frac{373d^3}{R}$, $R = \frac{373d^3}{W}$, $d = \sqrt[3]{\frac{WR}{373}}$.

Wrought-iron. $W' = \frac{933d^3}{R}$, $R = \frac{933d^3}{W}$, $d = \sqrt[3]{\frac{WR}{933}}$.

Steel..... $W' = \frac{1120d^3}{R}$, $R = \frac{1120d^3}{W}$, $d = \sqrt[3]{\frac{WR}{1120}}$.

* Prepared from Clark's *Manual of Mech. Engr.*, by Mr. J. W. Hill.

Digitized by Google

Torsional Deflection of Shafting:

$$\text{Cast-iron} \ldots\ldots D' = \frac{W'RL'}{11100d^4}.$$

$$\text{Wrought-iron}. D' = \frac{W'RL'}{16600d^4}.$$

$$\text{Steel} \ldots\ldots\ldots D' = \frac{W'RL}{34300d^4}.$$

The angle of torsion varies directly as the length of the bar, but torsional moment of rupture is independent of the length.

Mr. Clark regards a deflection of 1° in 20 diameters of length as a good working limit, and suggests—

$$\text{For cast-iron shafts} \ldots\ldots d = \sqrt[3]{\frac{W'R}{18.5}} \quad \text{and} \quad W'R = 18.5d^3;$$

$$\text{For wrought-iron} \ldots\ldots\ldots d = \sqrt[3]{\frac{W'R}{27.7}} \quad \text{and} \quad W'R = 27.7d^3;$$

$$\text{For steel} \ldots\ldots\ldots\ldots\ldots d = \sqrt[3]{\frac{W'R}{57.2}} \quad \text{and} \quad W'R = 57.2d^3.$$

Transverse Deflection of Shafting:

	Supported at ends.	Fixed at ends.
Cast-iron $\ldots\ldots$	$D = \frac{WL^3}{39400d^4}$,	$D = \frac{WL^3}{79900d^4}$.
Wrought-iron $\ldots$	$D = \frac{WL^3}{66400d^4}$,	$D = \frac{WL^3}{133000d^4}$.
Steel $\ldots\ldots\ldots$	$D = \frac{WL^3}{78800d^4}$,	$D = \frac{WL^3}{158000d^4}$.

Digitized by Google

The deflection should not exceed .01 inch per foot of length, or 1 inch in 100 feet; whence for shafts of—

	Supported at ends.	Fixed at ends.
Cast-iron.....	$d = \sqrt[4]{\frac{WL^2}{394}}$,	$d = \sqrt[4]{\frac{WL^2}{790}}$.
Wrought-iron..	$d = \sqrt[4]{\frac{WL^2}{664}}$,	$d = \sqrt[4]{\frac{WL^2}{1330}}$.
Steel.....	$d = \sqrt[4]{\frac{WL^2}{788}}$,	$d = \sqrt[4]{\frac{WL^2}{1576}}$.

Horse-power of Shafting.—Let S = revolutions per minute;

H = horse-power developed.

Cast-iron round shafting,

$$18.5 \times 3.1416 \times 2 = 116.24 \quad \text{and} \quad \frac{33000}{116.24} = 284.$$

Wrought-iron round shafting,

$$27.7 \times 3.1416 \times 2 = 174.04 \quad \text{and} \quad \frac{33000}{174.04} = 189.6.$$

Steel round shafting,

$$57.2 \times 3.1416 \times 2 = 359.4 \quad \text{and} \quad \frac{33000}{359.4} = 91.82.$$

Then

$$\text{For cast-iron}..... H = \frac{Sd^3}{284};$$

$$\text{For wrought-iron}... H = \frac{Sd^3}{189.6};$$

$$\text{For steel}..... H = \frac{Sd^3}{91.82}.$$

Digitized by Google

CHAPTER XIII.

CONDENSERS AND PUMPS.

102. Surface Condensers.*—The old practice of making the condensing surface a certain percentage of the heating surface of the boilers has been largely followed by designers, and is even now recommended by many engineers. But it is evident that there can be no relation between them; for the condensing surface depends upon its efficiency, the initial temperature of the exhaust steam, and the temperature of the feed, injection, and discharge waters; whereas the heating surface depends upon its efficiency, type of boiler, quality of coal used, and furnace draught.

It would thus appear that if the temperatures in the condenser were nearly alike for all condensing engines, there should be some definite ratio between the amount of surface for condensation and the designed I. H. P. This, however, is not a safe rule, because the pounds of steam per I. H. P. per hour vary, being different with simple, two-cylinder compound and triple-expansion engines, and if they are steam- or air-jacketed, and no doubt has its minimum value where properly designed steam-jacketed triple-expansion engines are used.

In the *Marine Steam-Engine*, by Richard Sennett, R.N., the condensing surface is stated as being from 2.00 to 2.50 square feet for each designed I. H. P.; while *A Manual of Marine Engineering*, by Prof. A. E. Seaton, has the following table, where the temperature of the injection-water is 60° F., viz.:

* From an article on Surface Condensers, by the author, in *Proceedings of U. S. Naval Instit.*, May 1883.

Digitized by Google

Absolute pressure of exhaust steam.	Square feet of condensing surface per I. H. P.
30 pounds	3.00
20 "	2.50
15 "	2.25
12.5 "	2.00
10 "	1.80
8 "	1.60
6 "	1.50

And he says that when the vessel is intended to cruise in the tropics the value must be increased 20 per cent, and when she occasionally visits the tropics increased 10 per cent, while 10 per cent less will give a good result in Arctic waters.

J. F. Spencer, in a paper read before the *Institute of Engineers* (Scotland), Feb. 5, 1862, gave the following:

Advantages of a Surface Condenser.

1. Freedom from injurious deposits in boiler. Small amount of scale.

2. Since the boilers will be stronger, steam of a higher pressure may be used than is possible with the jet condenser.

3. The foulest water may be used as the refrigerating agent.

4. The supply of feed-water to the boilers is more regular than is possible when using the jet condenser.

5. The load on the air-pump is uniform.

6. Gain in the use of the fuel, as the loss from blowing off is from 15 to 20 per cent less when surface condensers are employed.

7. Boilers need not be cleaned so frequently; less wear, tear, and expense.

8. Can use increased expansion of steam.

9. Heating surface of the boiler is more efficient, as there is less incrustation.

Disadvantages of a Surface Condenser.

1. Additional pumps and machinery.

2. Additional space occupied by the machinery.

3. The use of the same water over and over again is held by some to corrode the boiler.

4. Complication of tubes, etc.

Digitized by Google

5. Liability to leakage.

6. Increased first cost of from 10 to 20 per cent, and increased cost of repairs.

7. More refrigerating water is needed than for a jet condenser.

103. Thermal Experiments and Deduction of a Formula for the Condensing Surface.*

Joule's Experiments with the Surface Condenser.†—Joule's apparatus consisted of two concentric copper tubes, through the inner one of which passed the steam to be condensed, while the circulating water traversed the annular volume between them. When a spiral wire was used to give a twist to the current of circulating water it was placed in this annular volume.

He deduced: 1. The temperature of the steam side of the tube is uniform throughout its length.

2. The resistance to conductivity is due to the film of water on each surface, and is independent of the kind or thickness of the metal used.

3. The conductivity of the tube used increases with an increase in the velocity of the circulating water; and that for the same head the conductivity is greatest when a spiral wire gives a twist to the current of circulating water.

4. Air is a very poor refrigerating agent. The conductivity of copper tubes is thus stated by Rankine:†

Cooling fluid.	Initial temperature, Fahr.	Material.	Steam condensed per sq. ft. per hour, lbs.	Authority.
Water	68° to 77°	Copper	21.5	Peclet.
"	?	"	100.0	Joule.

Each pound of steam condensed gave up about 1000 British thermal units.

* From a paper by the author on Surface Condensers, *Trans. Am. Soc. Mech. Engr.*, vol. ix.

† From an article "On Surface Condensation of Steam," by J. P. Joule, *Jour. Frank. Inst.* 1862, p. 136.

‡ Rankine's *Steam-Engine*, § 222.

Digitized by Google

*Isherwood's Experiments on Conductivity of Metals.**—The apparatus consisted of several metal parts, each 10 in. internal diameter, 21.25 in. inside height, which were immersed in a common vessel supplied with steam of a certain pressure and temperature from the boiler. The pots were kept constantly filled with water at 212° F., and the quantity evaporated measured the conductivity of the metal. The heat of vaporization was given by the steam-bath. Pots of copper, brass, cast and wrought iron were used simultaneously. The conditions were identical in each series of experiments.

The experiments covered many days. The temperature of the steam-bath and the thickness of the pots varied between wide limits.

The following laws were deduced:

1. The number of heat units transmitted per hour through a square foot of surface is in direct ratio of the difference in temperature of the sides of the intervening metal.

2. Within limits, the rate of transmission of heat through a metal wall is independent of its thickness (Isherwood used thicknesses of $\frac{1}{8}$, $\frac{1}{4}$, and $\frac{3}{8}$ in.).

3. The thermal conductivity is as given in the following table

Metal.	Thermal conductivity in terms of heat units transmitted per hour through one square foot of material for a difference in temperature of 1° Fahr.	Relative thermal conductivity.
Copper (refined).....	642.543	1.000000
Brass (60 Cu, 4 Zn).....	**556.832**	0.866607
Wrought-iron (best rolled).....	373.625	0.581478
Cast-iron (several times remelted)..	315.741	0.491393

Nichol's Experiments with Condenser Tubes.†—The apparatus consisted of an ordinary brass condenser tube inside a wrought-iron pipe. The radiation of heat from the outer pipe was determined from separate experiments, and its effects

* See p. 58, Shock's *Steam-Boilers.*

† *Engineering*, xx. 449.

Digitized by Google

were eliminated. Steam filled the annular space between the tubes. Its temperature and pressure were noted, and also the amount condensed. Circulating water traversed the inner tube. Its velocity varied. The quantity flowing through in a given time and the temperature on entering and leaving the tube were noted. Experiments were made with the tube in a horizontal, vertical, and in an inclined position.

The results were:

1. The temperature of the water side of the tube is the arithmetical mean of the initial and final temperatures of the refrigerating agent, provided the rise in temperature is not greater than is found in ordinary surface condensers.

2. The efficiency of the condensing surface is increased as the quantity of circulating water is increased.

3. The surface is most efficient when the tube is horizontal.

4. The number of heat units transmitted through a unit surface in a unit of time is greatest when the difference in temperature between the sides is greatest.

DEDUCTION OF FORMULA FOR THE CONDENSING SURFACE.

In studying the action of the surface condenser we will make the following assumptions, as warranted by the experiments just cited, viz.:

1. The temperature of the steam side of the tube is uniform throughout its length (Joule), and the steam is saturated at a temperature corresponding to the reading of the vacuum gauge. This latter assumption,* though arbitrary, is probably sufficiently exact, since (*a*) the fluctuations of the reading of the gauge are inappreciable; (*b*) the exhaust-port is opened and closed gradually, steam is exhausted throughout all, or nearly all, of the stroke of the piston, and the steam is condensed as soon as it arrives in the condenser; (*c*) the steam in the cylinder at the end of its expansion is almost certain to be wet, even with steam-jackets; and this wet steam, on account of free

* This assumption is indorsed by C. Andenet in his treatise on *Étude sur les Condenseurs à Surface*, and by E. Cousté in *Annales du Génie Civil*. See Van Nostrand's *Engr. Mag.* vol. i., Nos. 7, 9, and 10.

Digitized by Google

expansion during the exhaustion, is saturated when it reaches the condensing surface. This is still further probable because the condenser pressure is always several pounds below the terminal pressure in the condensing cylinder.

2. The temperature of the water side of the tube has a value equal to the arithmetic mean between the initial and final temperatures of the circulating water (Nichol).

3. The conductivity of the surface is increased as the quantity of circulating water is increased (Nichol, Joule). This quantity of water will vary inversely as its rise in temperature.

4. The number of heat units transmitted per hour through a unit surface depends directly upon the difference between the temperature of the sides (Isherwood, Nichol); varies with the material used, as shown by the table; and is independent of the thickness of metal used for the tubes, as found in ordinary practice (Isherwood, Joule).

Let S = the condensing surface in square feet;

T_1 = the temperature of the steam corresponding to a pressure indicated by the vacuum gauge in degrees Fahr.; (See table in § 135.)

T_2 = the temperature of the condensed steam as it leaves the condenser, i.e., the temperature of the hot-well;

t = mean temperature of the circulating water, or the arithmetical mean of the initial and final temperatures;

L = latent heat of saturated steam at a temperature T_1;

K = perfect conductivity of one square foot of the metal used for the condensing surface for a range of 1° F., or 556.832 British thermal units for brass; (See table on p. 279.)

c = fraction denoting the efficiency of the condensing surface;

q = rate of conductivity corresponding to a variable range of temperature $T - t$, and an elementary surface of rate ds. T has a value between T_2 and T_1;

Digitized by Google

W = total number of pounds of steam sent to the condenser per hour.

The heat given up by the steam to the circulating water is

$$\int q ds = W(L + T_1 - T_2), \quad . \quad . \quad . \quad . \quad . \quad (1)$$

As a unit mass of the steam at temperature T_1 impinges upon the refrigerating surface which is at a constant temperature t, the units L are given up, and the steam becomes water at T_1. The range of temperature during this performance is

$$T_1 - t,$$

and for the units L we have the constant quantity

$$q = ck(T_1 - t).$$

The condensed steam at T_1 now gives up heat to the circulating water, so that the range is at first

$$T_1 - t,$$

and finally

$$T_2 - t;$$

and at any instant, while it is on an elementary area of rate ds, the range is

$$T - t.$$

Hence, for water,

$q = ck(T - t)$, a variable quantity.

Transforming equation (1), and integrating,

$$S = \frac{W}{ck}\left\{\frac{L}{T_1 - t} + \int_{T_2}^{T_1} \frac{dT}{T - t}\right\}, \quad . \quad . \quad . \quad . \quad (2)$$

or

$$S = \frac{W}{ck}\left\{\frac{L}{T_1 - t} + \log_e\left(\frac{T_1 - t}{T_2 - t}\right)\right\}. \quad . \quad . \quad . \quad (3)$$

The quantity $\frac{L}{T_1 - t}$ is always large, while $\log_e\left(\frac{T_1 - t}{T_2 - t}\right)$ is never greater than about 0.1. Hence equation (3) will be prac-

Digitized by Google

tically correct, and much simplified, by dropping the last term; so that

$$S = \frac{WL}{ck(T_1 - t)} \quad . \quad . \quad . \quad . \quad . \quad . \quad . \quad (4)$$

The fractional coefficient c, denoting the efficiency of the condensing surface, remains to be determined. It must be applicable to a condensing surface in ordinary use, i.e., coated with saline and greasy deposits. The best data, available to the author, for determining the value of c are furnished by the U. S. R. M. S. *Dallas*, from the experiments of Messrs. Loring and Emery,* as shown in the following table:

W,	7261.54
S,	857.70
Barometer,	30.195
Vacuum gauge,	24.79
Vacuum pressure in lbs. per sq. in.,	2.597
Corresponding temperature of saturated steam,† T_1,	136.17
L,	1019.22
Initial temperature of the circulating water,	67.67
Final temperature of the circulating water,	108.67
Mean temperature of the circulating water, t,	88.17
Temperature of the hot-well, T_2,	134.
$T_1 - t$,	48.
$T_2 - t$,	42.83
k, from Isherwood's table on p. 279,	556.832
ck,	180.14
c,	0.323

The value of ck being 180, equation (4) becomes

$$S = \frac{WL}{180(T_1 - t)} \quad . \quad . \quad . \quad . \quad . \quad . \quad . \quad (5)$$

This applies to an engine having an *independent* circulating pump. When the pump is worked by the main engine, the

* *Report of Secretary of the Navy*, 1874; *Engineering*, xxi. 121.

† See table in § 135.

Digitized by Google

value of S should be increased about 10 per cent. *Formula* (5) *is recommended in designing a surface condenser.*

The value of W, the pounds of steam sent to the condenser per hour, will vary with the type of engine used, initial pressure of steam, ratio of expansion, and whether the cylinders are steam-jacketed or not. No more reliable data are accessible on this point than the results of Messrs. Loring and Emery, already referred to, and here summarized, viz.:

Type of condensing engine.	With or without a steam-jacket.	Absolute steam pressure in boilers. Pounds per sq. in.	Pounds of steam used per I. H. P. per hour.	Ratio of the condensing surface to the I. H. P.
2-cyl. compound, 90°.....	With.	55	22	2.08
2-cyl. compound, 90°.....	With.	85	18.4	1.74
Non-compound.....	With.	27.5	33 to 37	3.12 to 3.5
Non-compound.....	With.	55	22 to 26.5	2.08 to 2.53
Non-compound.....	With.	85	20.5 to 25	1.94 to 2.36
Non-compound.....	Without.	27.5	40 to 44	3.78 to 4.15
Non-compound..... ...	Without.	50	26.7 to 31	2.54 to 2.93
Non-compound.....	Without.	85	21.7 to 25	2.05 to 2.36

In designing it is never well to anticipate a vacuum exceeding 25 inches of mercury, when the engines are developing full power. This corresponds to about 2.5 lbs. pressure. So that $T_1 = 135$ and $L = 1020$; and equation (5) may be reduced to

$$S = \frac{1020W}{180(135 - t)} = \frac{17W}{3(135 - t)} \quad . \quad . \quad . \quad . \quad . \quad (6)$$

The value of t will vary with the quantity of circulating water used, and the season of the year. It, being the arithmetical mean of the initial and final temperatures of the circulating water, is about 60 in the winter and 75 in the summer. Since the larger value of t gives the greater value of S, we will substitute $t = 75$, and equation (6) becomes

$$S = \frac{17W}{3(135 - 75)} = \frac{17W}{180}; \quad . \quad . \quad . \quad . \quad . \quad (7)$$

Digitized by Google

W is the total number of pounds of steam condensed per hour, or,

W = I. H. P. × pounds of steam used per I. H. P. per hour.

By combining this with the data given in the preceding table, the last column was deduced.

104. Quantity of Condensing Water.—

Let H = number of heat units given up by 1 lb. of steam to the condensing water = $L + T - T_2$;
W = number of pounds of steam to be condensed per hour;
R = rise in temperature of the condensing water in degrees Fahrenheit.

Then the number of pounds of condensing water required per hour is

$$Q' = \frac{WH}{R} \quad . \quad . \quad . \quad . \quad . \quad . \quad . \quad . \quad (1)$$

This formula applies to both the surface and jet condenser.

105. Design of Parts of a Surface Condenser.—Surface condensers are in general use only for marine engines. The Stimer condenser was used to a certain extent, but has since been replaced by better designs. In it the tubes were vertical, the lower end being expanded into a tube-sheet, while the upper end passed with a slight clearance through a deeper tube-sheet (see *G* of Fig. 174, p. 292). The circulating water surrounded the tubes, entering at the bottom and discharging within a few inches of the under side of the top tube-sheet. The exhaust steam passed downward through the tubes.

About the time that Stimer's condenser came into use Lighthall invented a condenser where the circulation of refrigerating water was effected by the movement of the ship. In this condenser the tubes were horizontal, and the water passed through them. Water was admitted through a hole in the side of the ship, forward of the condenser; it then passed through the tubes into an after chamber, and thence through

Digitized by Google

a pipe and into the sea abaft the condenser. The exhaust steam entered the space around the tubes, and was given a tortuous path by deflecting-plates. In order to use this con-

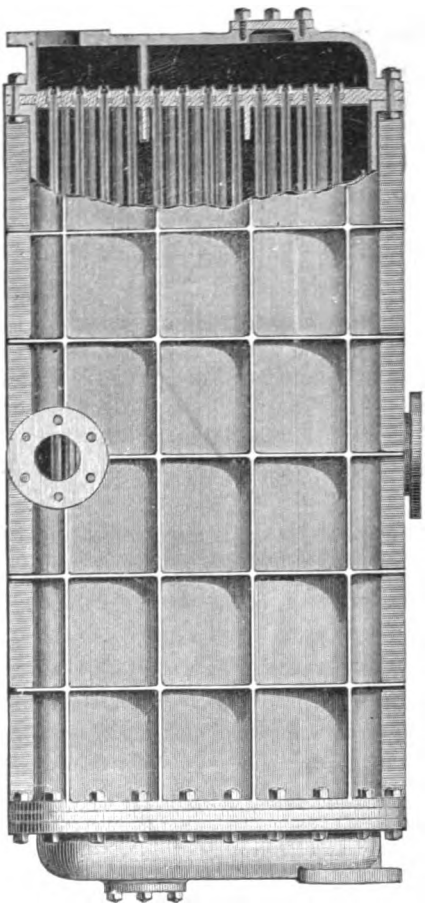

Fig. 171.

denser when the vessel was at her anchorage a current of steam was utilized to produce a circulation of sea-water through the tubes.

The Cobb condenser is shown in Fig. 171. The condenser is cylindrical. Steam enters at the top and surrounds the tubes,

Digitized by Google

FIG. 177.

DETAILS OF COMPOUND ENGINE NO. 669, CYLINDERS 21 IN & 36 IN. DIAMETER, 30 IN. STROKE.

Scale, ¼ In. = 1 foot.

THE PUSEY & JONES CO., WILMINGTON, DEL.

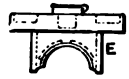

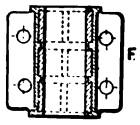

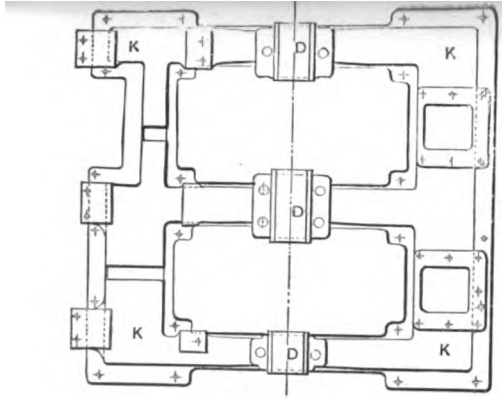

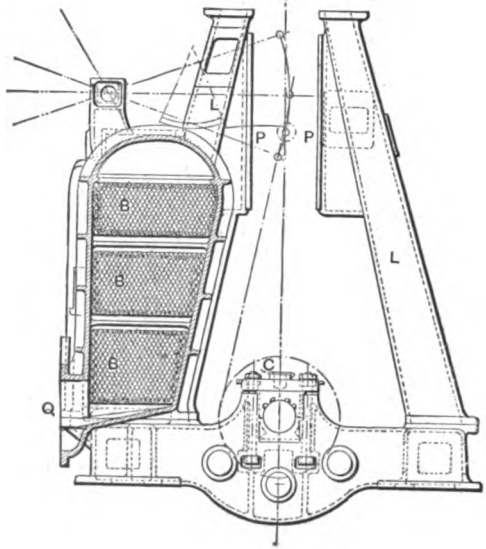

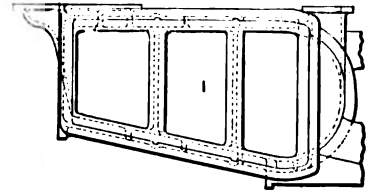

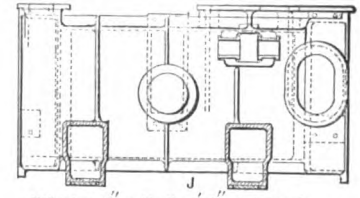

1113 tubes, ¾″ outside dia. 5′ 5½″ whole length,
956 sq. ft. of cooling surface

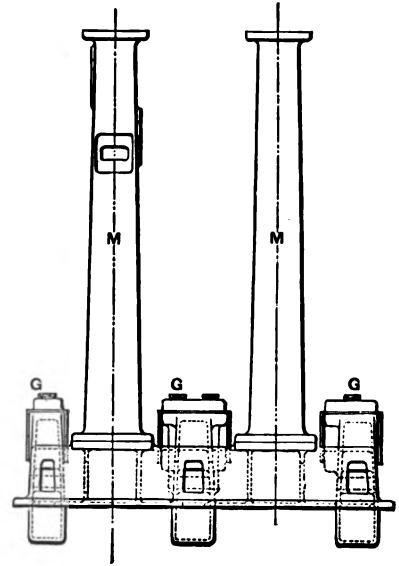

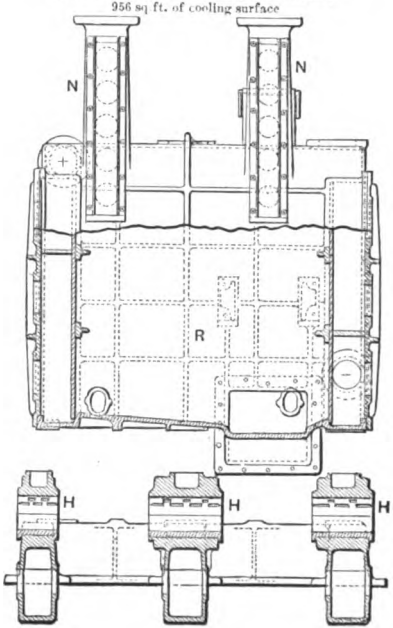

Digitized by Google

being sent to every part of the cooling surface by means of a perforated deflecting-plate. The refrigerating water enters at the bottom, traverses three lengths of tubing, and is discharged at the top. The tubes are prevented from crawling out by means of the contracted mouth to the stuffing-box gland.

Condensers are now generally made with the tubes horizontal, and circulating water passing through them. The tubes are arranged in nests as shown in Fig. 172. This represents a marine-engine condenser designed by The Pusey & Jones Company, of Wilmington, Del. There are three nests, averaging 370 tubes each. The water circulates through each nest in succession. *I* is a side elevation; *J* is a plan; *B* is a transverse section through the tube nests; *R* is a part side elevation and part longitudinal section; *A* shows the method of making the tube joints; *B*, *B*, *B* are nests of tubes; and *Q* is the channel way. The condenser is cast with the engine frames on its side, and supports one half of the weight of the cylinders.

A perspective view of a condenser similar to this design is shown in Fig. 92.

Fig. 173 is Wheeler's condenser run by independent pumps. The courses of the steam and water are indicated by the arrows. This is one of the best forms of condensers used, as it is strong, compact, and has good circulation for its refrigerating water. There is a water tube, shown at *P* in Fig. 174, inside a larger tube, against which the steam impinges. The inner tube is open at both ends, while the outer tube is closed at one end. The refrigerating water passes along the condensing surface—not as a solid stream, where the centre will be wasted, but as an annular ring. Thus the circulation is thought to be improved over that with ordinary forms of condensers.

The condenser should be designed to withstand a collapsing pressure, when in operation, of 15 lbs. to the square inch of inside surface of shell, or a bursting pressure equal to that of the initial steam in the cylinder, provided there is any likelihood of live steam ever leaking past the valves and into the condenser while the engine is at rest. Also, the chambers through which water passes under pressure must be designed for that pressure.

Digitized by Google

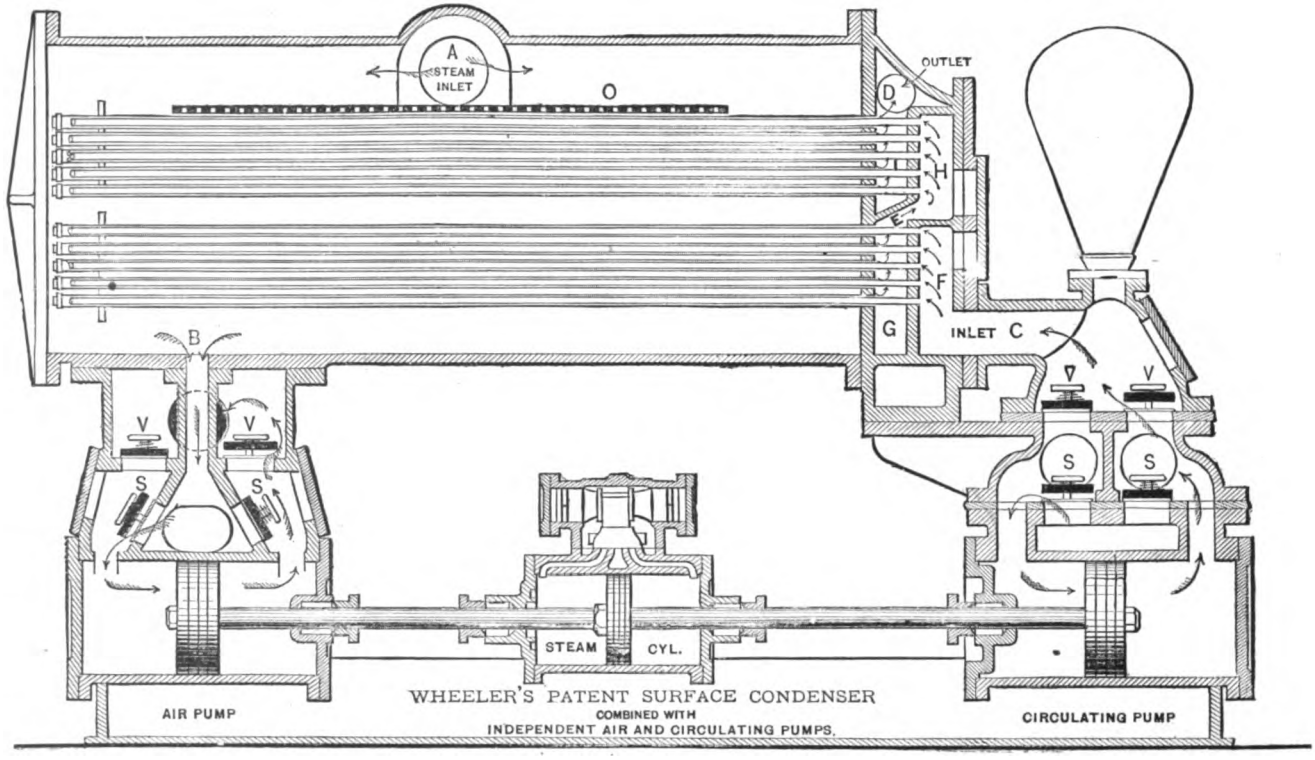

Fig. 173.

Digitized by Google

In either case the formulæ given in § 36 are to be used, provided the shell is rectangular. If the condenser is cylindrical, use formulæ given in either § 14 or § 118.

The different methods used for making the joint at the tube ends, so as to permit free expansion of metal as the temperature is increased, are shown in Fig. 174. Howden's hemp or wick packing is shown at *A*. One end of the tube is expanded, while the other end is made tight by lampwicking or hemp being continuously wound around the tube and pressed into the stuffing-box. The circulating water should pass through the tube, flowing in at the stuffing-box end.

The old and new forms of Lighthall's packing are shown in *B* and *C*, respectively. In each, one end of the tube is expanded while the free end is packed with *papier maché*, which is moulded in the box to compactly fill it, and which cannot be withdrawn except by picking it out in small pieces. This is a very good form, and inexpensive. Winton's rubber packing is shown at *D*. One end of the tube is expanded, while the other expands freely through a hard ring of rubber. The rubber rests partly in a recess cast in the tube-sheet.

Spencer's rubber packing is shown at *E*. It consists of rubber washers. The circulating water should pass through the tube, entering it at the packing end. Marshall's moulded rubber packing is shown at *F*. It differs from Spencer's in shape only. Stimer's tube is shown at *G*. Hall's form of packing is shown in *H*. One end of the tube is expanded, while the other end passes through a screw-gland stuffing-box. Chapman's form of packing is shown in *I*. The packing-boxes are filled with Babbitt metal, and afterwards caulked. To prevent the tube crawling out, each end is slightly expanded.

The tube packings just explained do not permit the withdrawal of the tube without permanent injury. The packing shown at *J* consists of a small rubber ring which is pressed against the joint by means of a nut and washer (*Engineering*, xxxii. 304). Sewell's packing is shown at *K*. Rubber is used as the packing material, and is pressed against the tube by the small tubular gland. The cover-plate presses against the gland.

Digitized by Google

The tube cannot crawl out on account of the shoulder shown in the cover-plate. When putting on the cover-plate all the tubes are packed at the same time. This packing is the same at both ends of the tube. Archbold's packing is shown in *L*. Each tube is packed separately by a screw gland, while the tube cannot crawl out on account of the brass wire shown as brazed to it. Wilson's packing shown at *M* is similar to Sewell's, except that each tube is packed and screwed separately. Allen's soft wood packing is shown in *N*. The wood, at first a hollow cylinder, expands, and is self-locking when it becomes wet. The ends of the tubes are split to prevent crawling. Condensers packed with the Allen joint, when out of use for several months at a time, are usually found to have tight tube-joints. It is efficient and inexpensive. Wheeler's condenser tubing is shown at *P*. There are none but screw-joints. The circulating water follows the course of the arrows, steam surrounding the larger tube. *Q* illustrates Todd's method of making a tube-joint.

In surface condensers the circulating water usually passes through the tubes and the steam surrounds them. This method is preferable, as it permits of the joints between the tubes and tube-sheets being made more secure.

The efficiency * of the condensing surface is greatest when the tubes are horizontal. The circulating water should be forced through the tubes in such a way that the water and steam of lowest temperature are exposed to the same surface. The condensing water should traverse at least 20 feet of tubing before being delivered.

The area of cross-section of the tubes must be sufficient to permit the circulating water to pass with a high velocity.

Let Q' = number of pounds of circulating water used per hour $= \frac{WH}{R}$; (See § 104.)

A = area of cross-section of tubes in sq. in.,

* This has been proved by Mr. B. G. Nichol. See *Engineering*, xx. 449.

Digitized by Google

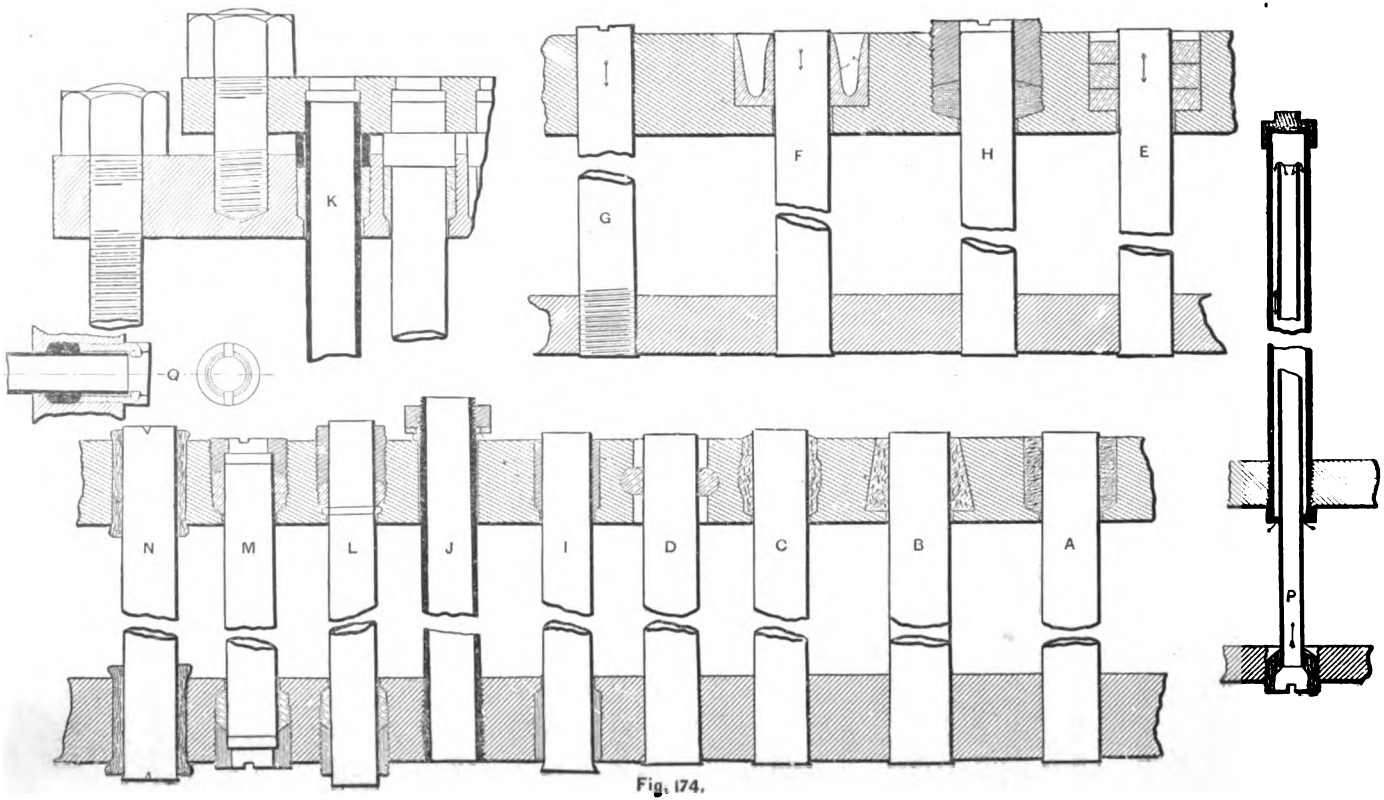

Fig. 174.

Digitized by Google

S = as before, the number of sq. ft. of condensing surface;

n = number of tubes used;

l = effective length of a tube in inches;

d = internal diameter of tube in inches;

v = least allowable velocity of flow of water through the tubes in feet per minute.

Then

$\frac{Q'}{60 \times 62.5}$ = number of cu. ft. of condensing water per minute,*

and

$$\frac{Av}{144} = \frac{Q'}{60 \times 62.5},$$

or

$$A = \frac{Q'}{26v}.$$

The velocity of flow through the tubes v should never be less than 400 nor more than 700 feet per minute. The coefficient of contraction is generally taken as 0.62 (Rankine).

Hence, from the previous article, the *area of cross-section of the tubes* in sq. in. is

$$A = \frac{Q'}{0.62 \times 26v} = \frac{Q'}{16.12v} = \frac{WH}{16.12vR}. \quad . \quad . \quad . \quad (1)$$

To find the number of tubes, we have

$$S = \frac{nl\pi d}{144}$$

and

$$A = \frac{n\pi d^2}{4}.$$

Hence the *number of tubes* is

$$n = 1.27 \frac{A}{d^2} = 45.84 \frac{S}{ld}. \quad . \quad . \quad . \quad . \quad . \quad (2)$$

* For accuracy, 62.5 should be replaced by 64.1 when sea-water is used for condensing. Also, for greater accuracy, when the circulating water is fresh 62.5 should be replaced by 62.25. However, 62.5 is the value most frequently used in hydraulics.

Digitized by Google

The tubes should be solid-drawn brass, and subjected to both a steam and hydraulic test. They are usually from ½ to 1 inch in diameter, and 18 to 16 B. W. G. thick. The composition used varies. The following proportion is frequently used, viz.:

68 copper, 32 Silesian spelter. (Seaton.)

The tubes are usually tinned, if of brass. The unsupported length of the tube should not exceed 100 to 120 diameters.

106. Design of a Jet Condenser.—The jet condenser is in general use for condensing engines used on land and for river and bay steamers. It is usually cylindrical, and placed directly under the steam-cylinder; but wherever it is placed, the inlet for steam must be high enough to prevent the water flowing into the steam-cylinder, and its bottom must be so formed that the water can readily pass to the air-pump. Its diameter is generally made the same as the steam-cylinder. *The quantity of water necessary for condensation* has been shown in § 104 to be

$$Q' = \frac{WH}{R} \text{ pounds per hour.}$$

The condenser must be large enough to hold the water and steam flowing into it at each stroke of the piston. The capacity of a jet condenser is

$$= \frac{\text{Volume of the cylinders exhausting into it}}{4 \text{ to } 2}.$$

The *walls* of the condenser may be proportioned by the formulas given in §§ 36, 14.

Although there is more diversity in details shown in the design of a jet condenser and its accompanying pumps than perhaps in any other part of a steam-engine's mechanism, yet the condenser-box is invariably made to consist of some device for insuring a good mixture of the steam and water. The injection-water is formed into a spray either by use of a spray-plate or a rose-sprinkler, while the steam enters the chamber passing

Digitized by Google

through the spray. The arrangement* of foot-valves, air-pump, and jet condenser is shown in Fig. 175. *Z* is the injection orifice; *Y*, the exhaust-steam inlet; *X*, the foot-valve, whose

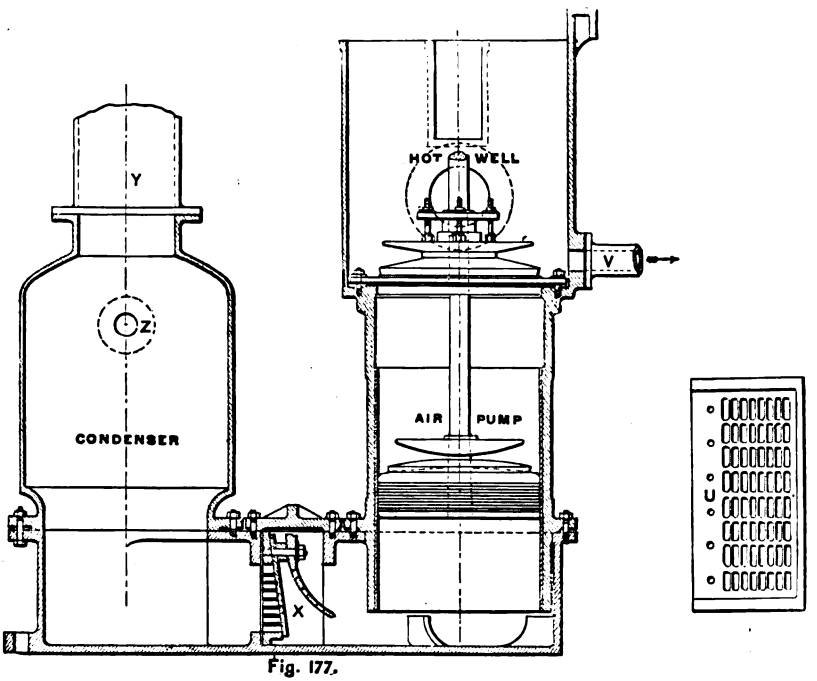

Fig. 177.

seating is shown in elevation at *U*; and *V* is the discharge from the hot-well to the feed-pump.

The Worthington Independent Jet Condenser† is shown in Fig. 176. The refrigerating water enters the condenser at *B*. This inlet should not be more than twenty feet above the surface of the water supply. The spray-pipe *C* has a number of vertical slits in its lower extremity, through which the condensing water passes and spreads out into thin sheets. The serrated surface of the spray-cone *D* breaks the water passing over it into a thin spray. The exhaust steam, to be condensed, en-

* Fig. 175 is one of Busbridge's drawings; also Fig. 178.

† Illustration and description are from Worthington's catalogue on *Independent Condensers*. The condenser is patented.

Digitized by Google

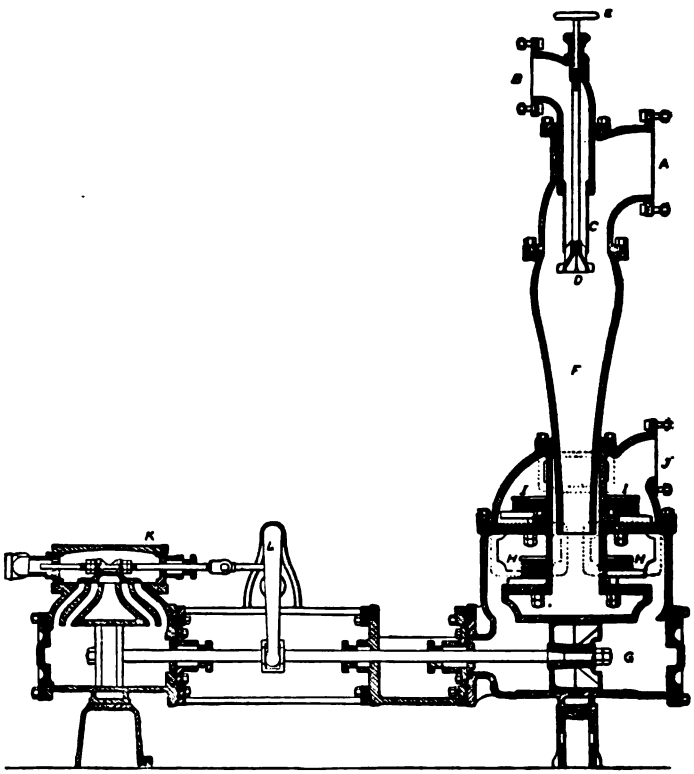

Fig. 176.

Digitized by Google

ters the condenser at *A*. There is a rapid and thorough intermixture of the steam and water. The spray-cone is adjusted by means of the wheel *E*. In case it is obstructed from any cause (a strainer is always used for the refrigerating water), the obstacle can be washed away by turning *E* so as to lower *D*. The quantity of water supplied is always regulated by an injection-valve placed in the injection-pipe. *H* and *I* are the inlet and outlet valves of the air-pump *G*. The discharge is through *J*. The pump is actuated by the engine *K*, having a Worthington valve. The whole mechanism may be called a duplex air-pump attached to a jet condenser.

The operation of the condensing apparatus is as follows: Steam being admitted to the cylinders *K*, so as to set the pump in motion, a partial vacuum is formed in the condenser, the engine cylinder, the connecting exhaust-pipe, and the injection-pipe. This causes the injection water to enter through the injection-pipe attached at *B* and spray-pipe *C*, into the condenser-cone *F*. The main engine being then started, the exhaust steam enters through the exhaust-pipe at *A*, and, coming in contact with the cold water, is rapidly condensed. The velocity of the steam is communicated to the water, and the whole passes through the cone *F* into the pump *G* at a high velocity, carrying with it, in a thoroughly commingled condition, all the air or uncondensable vapor which enters the condenser with the steam. The mingled air and water is discharged by the pump through the valves and pipe at *J*, before sufficient time or space has been allowed for separation to occur.

Since the zone in which the condensation takes place is small, the rapid condensation is due only to the great surface exposed by the spraying water. In case the water accumulates in the condenser-cone *F*, either by reason of an increased supply, or by a sluggishness or even stoppage of the pump, as soon as the level of the water reaches the spray-pipe and the spray becomes submerged the condensing surface is reduced to a minimum, only a small annular ring being exposed to the overpowering steam from the main engine. The vacuum is immediately broken, and the exhaust steam escapes by blowing

Digitized by Google

through the injection-pipe and through the valves of the pump, and out the discharge-pipe at *J*, forcing the water ahead of it; consequently, flooding the steam cylinder does not occur.

The Worthington independent jet condenser attached to a surface condenser is illustrated in Fig. 177. The circulating water passes successively through the sea-cock, pipe *E*, regulating-valve *D*, spray-chamber *N*, circulating-pump *F*, pipe *G*, valve *S*, tubes of the surface condenser, discharge-pipe *I*, valve *V*, and overboard. The exhaust steam from the engine enters the surface condenser at the valve *A*, is condensed, and falls to the hot-well *K*. From thence it is pumped to the boiler by the feed-pump *L*. The air and vapor arising from the surface of the water in the hot-well is removed through the pipe *M* by the circulating water passing through the spray-chamber *N*, acting as an injector. In case the water in this spray-chamber accumulates so as to run over towards the hot-well, it is stopped by the check-valve *R*. The check-valve could be dispensed with were the pipe *M* to rise about thirty feet, as is shown by the dotted lines. The independent jet condenser thus acts as an air-pump, which it replaces. Should the surface condenser become disabled, by closing the valves *A*, *C*, and *O*, and opening *B* and *P*, the apparatus is converted into a jet condenser with a salt-water feed. By closing *S* and *V*, and opening *T*, the surface condenser may be rendered accessible for examination.

Another form of jet condenser is shown in Fig. 182 in connection with a Worthington compound pumping-engine. The refrigerating water and steam to be condensed are thoroughly intermixed by several perforated plates. The steam traverses a path shown by the arrows. A channel-way leads the water from the condenser to the air-pump through *F* and *D* to the foot-valves *V* and *V'*. From thence it is taken by the air-pumps and delivered into the hot-well *H*. (For a further description of this engine see § 108.)

107. Design of the Injection Orifice.—The size of the orifice required will depend upon the quantity of injection-water (*Q'* pounds per hour), the size, length, bends, and surface of the injection-pipes, and the difference in pressure between

Digitized by Google

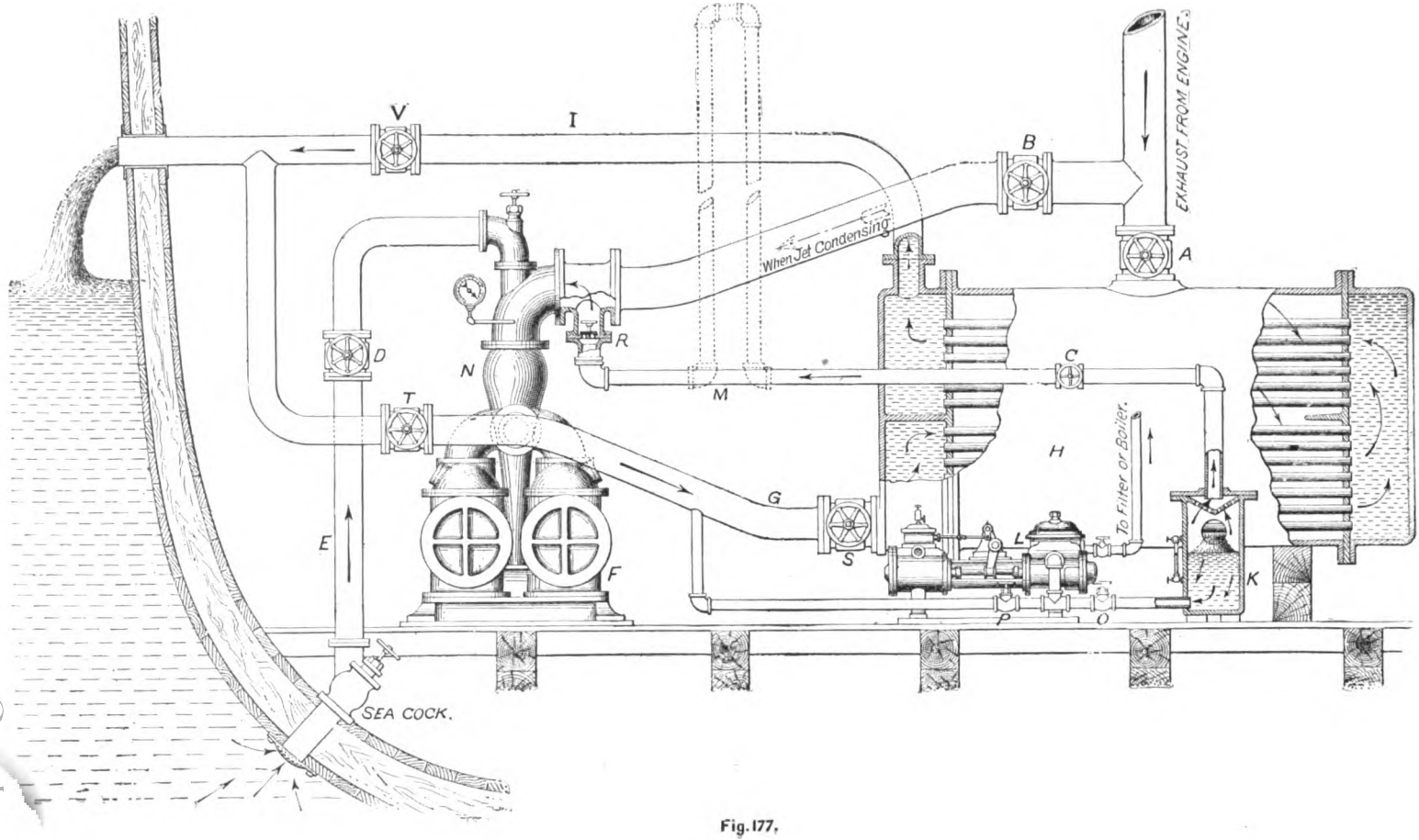

Fig. 177.

Digitized by Google

the source of supply and the interior of the condenser—i.e., by the *equivalent hydrostatic head.*

Let h = head of water above the foot-valves of the condenser in feet;

v = the corresponding velocity in feet per second due to the head $= \sqrt{2gh}$;

p = absolute pressure in condenser, 14.7 lbs. per sq. in., being the normal pressure of the atmosphere;

c = fractional coefficient dependent upon the size of the pipe, condition of surface, bends, etc.;

W' = weight of a cubic foot of condensing water = 62.5 for fresh water and 64.3 for sea-water;

d' = difference of level in feet between the source of supply and the water in the condenser, being plus or minus according as the source is above or below the condenser;

d = diameter of injection orifice in feet.

Then

$$h = \frac{(14.7 - p) \times 144}{W'} \pm d', \quad . \quad . \quad . \quad . \quad . \quad (1)$$

and the theoretical velocity in feet per second is

$$v = \sqrt{2gh} = 8.025\sqrt{h}. \quad . \quad . \quad . \quad . \quad . \quad . \quad (2)$$

Since Q' = the number of pounds of condensing water *required per hour*,

$$\frac{Q'}{60 \times 60 \times W'}$$

is the number of *cubic feet required per second*, and

$$\frac{c\pi d^2 v}{4} = \frac{Q'}{3600 W'},$$

or

$$d^2 = \frac{Q'}{900 c\pi v W'}.$$

Digitized by Google

Rankine gives the value $c = 0.62$; and by § 104, $Q' = \frac{WH}{vR}$.

Hence

$$\text{Diameter of Injection Orifice in feet} = d = 0.003\sqrt{\frac{WH}{vR}}, \quad (3)$$

where

W = pounds of steam condensed per hour;
H = number of heat units given up by one pound of steam to the steam condenser;
R = rise in temperature of the condensing water.

The injection orifice is usually covered with a strainer, the area of whose orifice should be about 1.5 the area of a cross-section of the injection-pipe.

108. Design of the Air-pump.—In Fig. 175 was given Busbridge's design for an air-pump, while Fig. 178 shows the details of the valves and pump bucket. It is a lifting bucket-pump, the rubber valve being made in the piston, as shown at B, B. The piston is metallic packed, as is a steam-piston. This form is frequently used, but sometimes the metallic packing is replaced by hemp or other fibrous packing, rubber, wood, or a combination of them.

The single rubber valve B, B is often replaced by several smaller ones of similar design, as shown in Fig. 182. In the figure, A represents an elevation and section of the "lifting" or delivery valve; C is its seat; E is a plan of its guard-plate; D is a plan of the bucket-valve's guard-plate; and F is a plan of the bucket with valve and guard removed, thus showing the valve-seat.

Fig. 179 is a double-acting air- or circulating-pump's piston. It is packed with hemp and lignum-vitæ. The piston for an air-pump should be made of cast-iron or brass, and the wrought-iron rod should be protected with a bushing of brass, as shown in the figure. The piston and rod should be designed by the formulæ given for steam-pistons and piston-rods.

Fig. 180 shows the arrangement of air-pump used at the Kimberley Water Works (illustrated in *Engineering*, xxxiii. 207). It is double-acting, with a metallic packing for its piston.

Digitized by Google

Fig. 181 illustrates an independent, horizontal, double-acting air-pump attached to a jet condenser, as manufactured

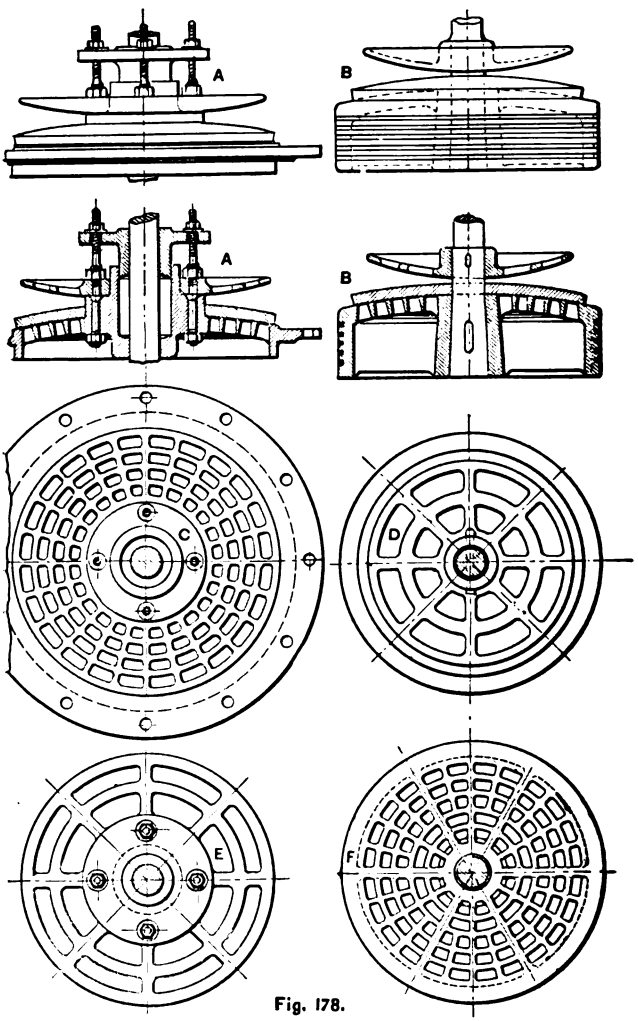

Fig. 178.

by the Davidson Steam Pump Co. of New York. This form will commend itself for general uses.

Digitized by Google

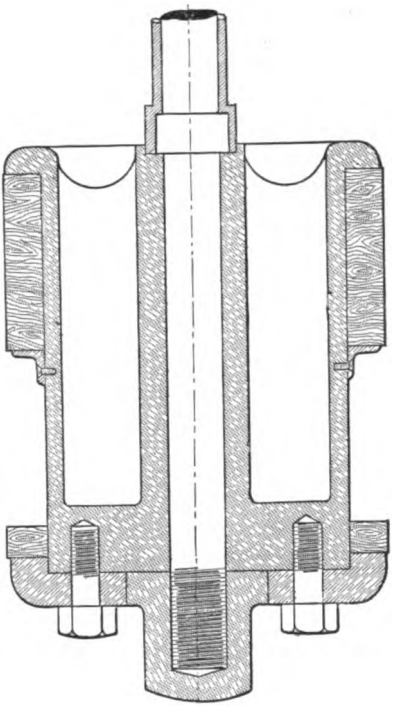

Fig. 179.

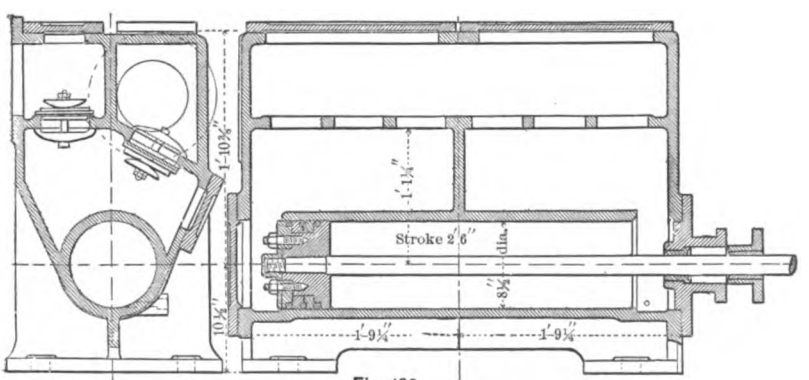

Fig. 180.

Digitized by Google

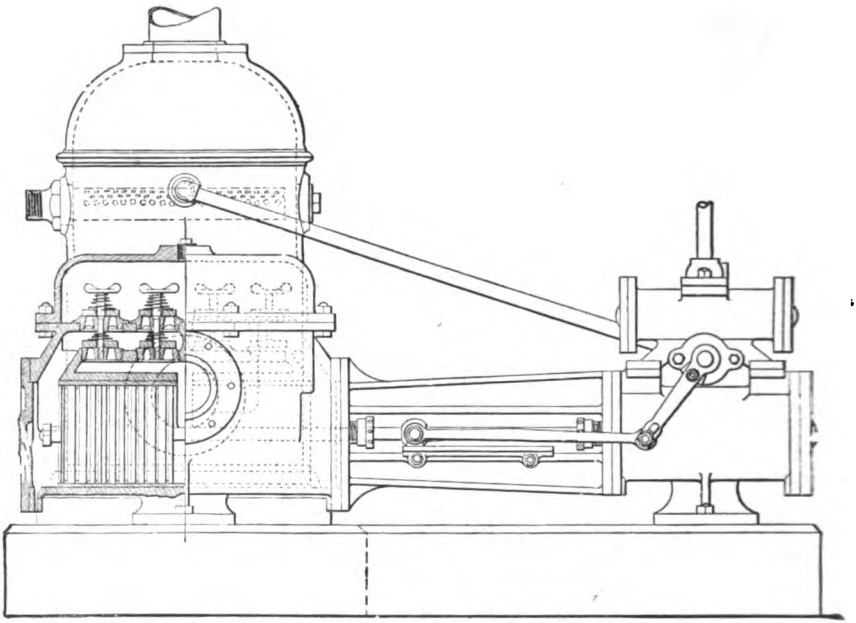

ELEVATION WITH PART SECTION OF AIR PUMP

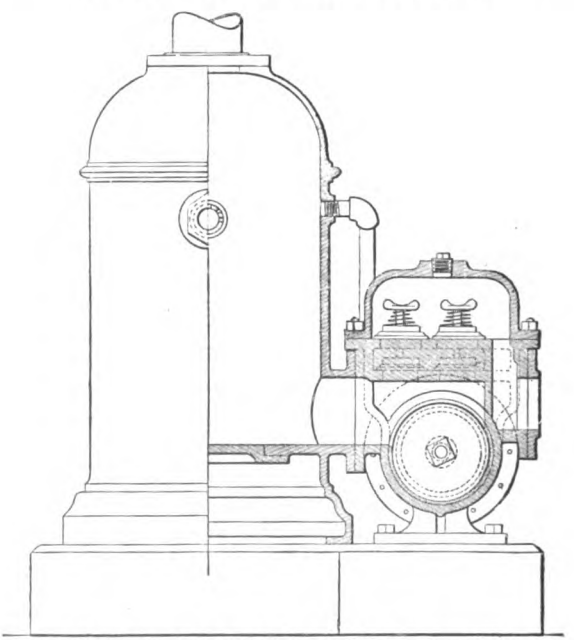

TRANSVERSE SECTION THROUGH AIR PUMP AND CONDENSER.

Fig, 181.

Digitized by Google

Digitized by Google

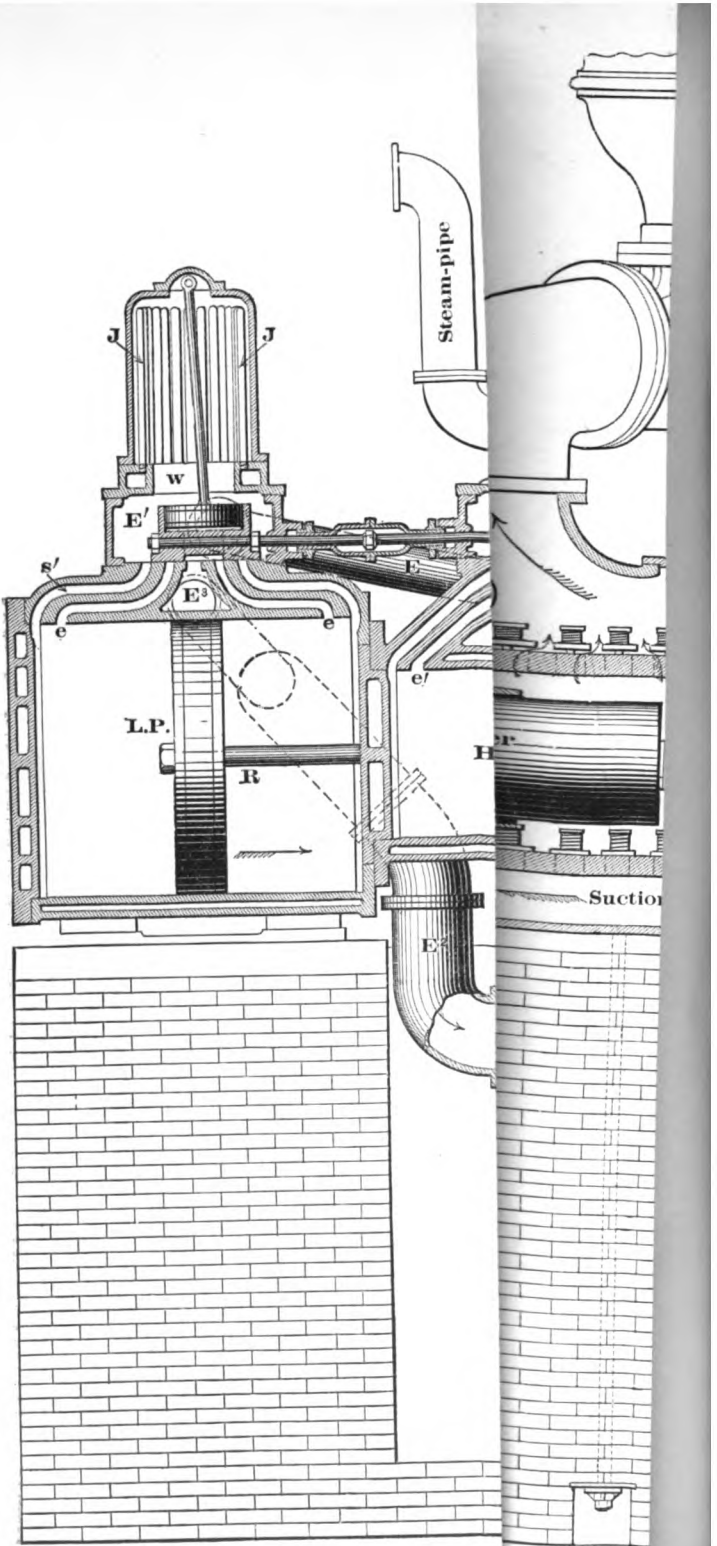

Digitized by Google

The Worthington pumping-engine, shown in Fig. 182, illustrates the lifting air-pump with a set of small rubber disk-valves in each piston pp'. The arrangement of steam and water cylinders, inlet and outlet valves, condenser, and air-pump is plainly shown.

The air-pump must be made large enough to extract the water from the condenser and the air which was originally contained in the water as it entered the boiler. Water contains under atmospheric pressure, mixed with it, $\frac{1}{20}$ its volume of air, so that only $\frac{19}{20}$ of each cubic foot of water is water.

Let q = volume of condensed steam per min. in cu. ft.
$= \frac{W}{60 \times 62.5}$, or $\frac{1}{3750}$ of the number of pounds of steam condensed per hour;

Q = the number of cu. ft. of condensing water used per min. $= \frac{WH}{3750R}$; (See § 104.)

p = absolute pressure of steam in the condenser, i.e., the normal pressure in the condenser;

T_1 = corresponding temperature; (See § 135.)

t' = temperature of injection-water.

Then the volume of air to be pumped from the condenser per min. is

$$\frac{1}{20} \cdot \frac{14.7}{p} (q + Q) \cdot \frac{t' + 461}{T_1 + 461} \text{ cu. ft.,}$$

and the volume of water is

$$\tfrac{19}{20} (q + Q).$$

(We are here designing the air-pump for a jet condenser, and will modify the result to apply to a surface condenser.)

Therefore the cu. ft. of air and water to be extracted from the condenser per min. by the air-pump is

$$= \frac{q + Q}{20} \left[19 + \frac{147}{p} \cdot \frac{t' + 461}{T_1 + 461} \right] \ldots \quad (1)$$

Digitized by Google

From this we see that the size of the pump is to be increased as p and T_1 are decreased and t' increased. Hence we will give the following practical values, in order to make the pump large enough for every requirement, viz.:

$$p = 2 \text{ lbs.}, \quad T_1 = 126°, \quad \text{and} \quad t' = 70,$$

when (1) becomes $= 1.28\ (q + Q)$, which is the volume of air and water to be extracted by the air-pump per min. for a jet condenser.

Let S = number of delivering strokes made by the air-pump in one min.;
L = length of stroke of air-pump in inches;
d = diameter of air-pump in inches.

Then

$$\frac{\pi d^2}{4} \times \frac{LS}{1728} = 1.28(q + Q). \quad . \quad . \quad . \quad . \quad . \quad (2)$$

$$\left.\begin{array}{l}\text{Diameter of air-pump for}\\ \text{a jet condenser}\end{array}\right\} = d = 54.3\sqrt{\frac{q+Q}{LS}} \text{ inches,} \quad . \quad (3)$$

Q is about 27 times q; hence

$$\left.\begin{array}{l}\text{Diameter of air-pump for}\\ \text{a jet condenser}\end{array}\right\} = 280.3\sqrt{\frac{q}{LS}} \quad . \quad . \quad . \quad . \quad . \quad . \quad (4)$$

EXAMPLE.—Given $S = 65$, $L = 42$ in., $q = 9$ cu. ft., jet condenser.

$$d = 280\ 8\sqrt{\frac{9}{42 \times 65}} = 16.12 \text{ in.}$$

By substituting $Q = 0$ in the above formulæ, we have the volume of air and water to be extracted per min. by the *air-pump for a surface condenser*, and its diameter. Hence, from (3),

$$\left.\begin{array}{l}\text{Diameter of air-pump for}\\ \text{a surface condenser}\end{array}\right\} = 54.3\sqrt{\frac{q}{LS}}. \quad . \quad . \quad . \quad . \quad . \quad (5)$$

Comparing (4) and (5), we see that the latter diameter is only about $\frac{1}{3}$ of the former, while the capacities of the pumps

Digitized by Google

would be about as 25 : 1. Since, however, the tubes frequently leak, and new water must be admitted to make up for waste, the usual practice is to make the air-pump for a surface condenser one half the capacity of one required for a jet condenser. This will enable the surface condenser to be used as a jet condenser in case of emergency.

The air-pump must always be placed below the channel-way leading from the condenser. The clearance in the pump should be the least allowable, so as to leave no space for confined air, while the delivery-valve should be at the top of the pump barrel. The piston, pump, rod, and pump barrel should be designed by the methods already given for the steam-cylinder.

The *channel-way, inlet, and delivery-valve seat openings* must each be large enough to permit the quantity

$$1.28(q + Q)$$

cu. ft. of air and water to freely pass each minute. The velocity of water and air entering the pump barrel should never be less than 400 ft. per min., nor more than 700. It should be great enough to permit water and air to closely follow in the wake of the pump piston. The size of the channel way is best determined by the equation of continuity, as follows:

Let V = velocity of water flowing through the channel-way or valve-seats, in feet per min.;

v = velocity of pump piston in feet per min. $= \frac{SL}{12}$;

A = area of cross-section of channel-way, or valve-seat openings, in square inches;

a = area of pump piston in square inches $= \frac{\pi d^2}{4}$;

c = coefficient of contraction.

Then

$$\frac{cVA}{144} = \frac{va}{144} = 1.28(q + Q),$$

Digitized by Google

or

$$\frac{400cA}{144} = \frac{SL}{12} \cdot \frac{\pi d^2}{4 \times 144} = 1.28(q + Q).$$

Hence

$$\left.\begin{array}{l}\text{Area of opening of}\\ \text{channel-way, inlet or}\\ \text{delivery-valve seats}\end{array}\right\} = A = \frac{SLd^2}{6111c} = \frac{q + Q}{4.5c} \text{ sq. in.} \quad (6)$$

The value of c is 0.62 for a circular and 0.6 for a square orifice. *Formula* (6) *is for a jet condenser. When a surface condenser is used, Q is zero.*

109. Design of the Circulating Pump.—Views of a circulating pump are given in Figs. 173, 177, 179, and 180. The pump should be designed by the following formulæ:

From § 104 we see that the quantity of circulating water in pounds per hour is

$$\frac{WH}{R},$$

while from § 108 the number of cubic feet per minute is

$$Q = \frac{WH}{3750R}.$$

Hence the effective *volume of the pump barrel* is, where S = the number of delivering strokes per minute,

$$\frac{Q}{S} = \frac{WH}{3750RS}.$$

And if L = length of stroke in inches as before, and d = diameter in inches,

$$\frac{\pi d^2}{4 \times 144} \times \frac{L}{12} = \frac{Q}{S} = \frac{WH}{3750RS}.$$

Digitized by Google

Digitized by Google

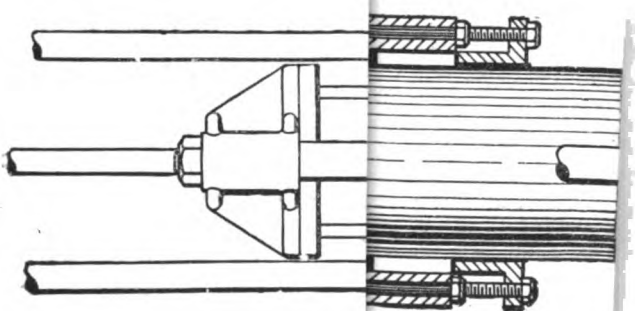

SUCTION

Digitized by Google

Therefore

$$\left.\begin{array}{l}\text{Diameter of circulating}\\ \text{pump in inches}\end{array}\right\} = 46.9\sqrt{\frac{Q}{SL}} = 0.22\sqrt{\frac{WH}{RSL}}. \quad . \quad (1)$$

The slip or loss of action of a pump varies from three to seven per centum, and should be allowed for, in using formula (1), by increasing Q.

It must be noted that Q is the number of cu. ft. of water *used per minute.*

From eq. (6) in the preceding article

$$\left.\begin{array}{l}\text{Area of opening of inlet or}\\ \text{delivery-valve seat}\end{array}\right\} = A = \frac{SLd^2}{3790} \text{ sq. in.} \quad . \quad (2)$$

The piston, piston-rod, and pump barrel should be made of brass or encased in brass.

Figs. 183 and 184 illustrate three forms of water cylinders as applied to water-pumping engines by the Geo. F. Blake Mfg. Co. of New York. "The plungers are made of hard iron or gun-metal, as the service may demand, and work through composition bearings provided with stuffing-boxes packed with suitable fibrous material, as shown at the top of Fig. 183, or are fitted with composition grooved bearings, as at the bottom." The latter form is recommended for use where the water is clear and free from grit.

For extremely heavy service, the form of water cylinder shown in Fig. 184 is in general use. It is known as the "outside plunger" pattern.

"By reference to the plate it will be seen that the plungers do not touch the interior of the cylinder, their only bearing being in the stuffing-boxes, which are packed from the outside. The plungers may be either iron or composition, and are fitted with heavy iron cross-heads, to which are attached the steel rods that connect each pair together. These rods work in outside bearings, thus supporting the plungers centrally within the cylinder. The stuffing-boxes and glands are lined with gun-metal, the valve-seats and valve-bolts being made of the same. This form of cylinders may be applied to either the duplex or

Digitized by Google

single engines, and in positions where gritty water is to be handled."

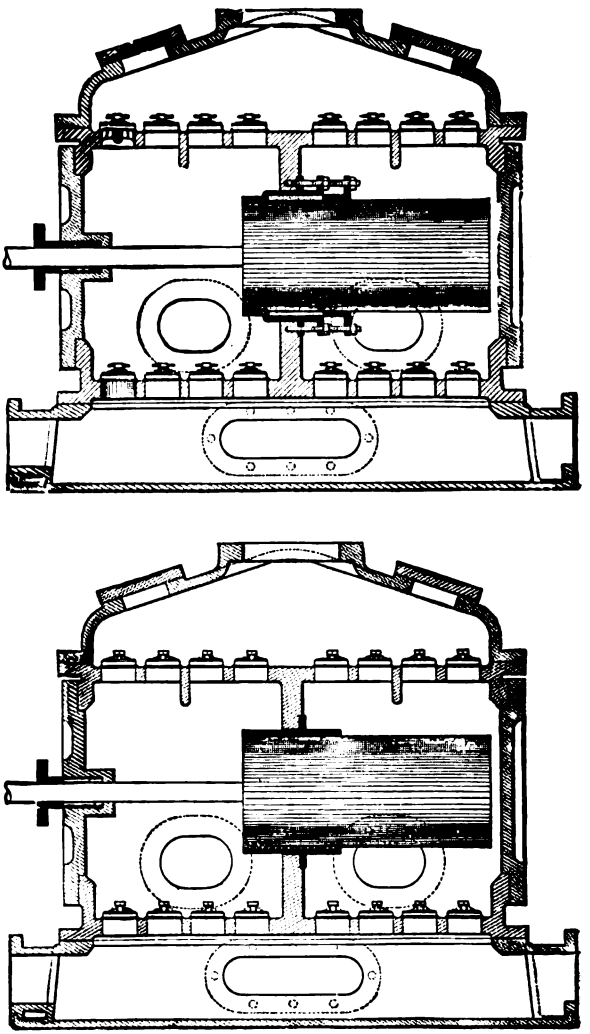

Fig. 183.

Digitized by Google

Centrifugal Circulating Pump.—Fig. 185 is one of Bushbridge's drawings of the Gwynn centrifugal pump. This form is in general use, and is a most excellent design.

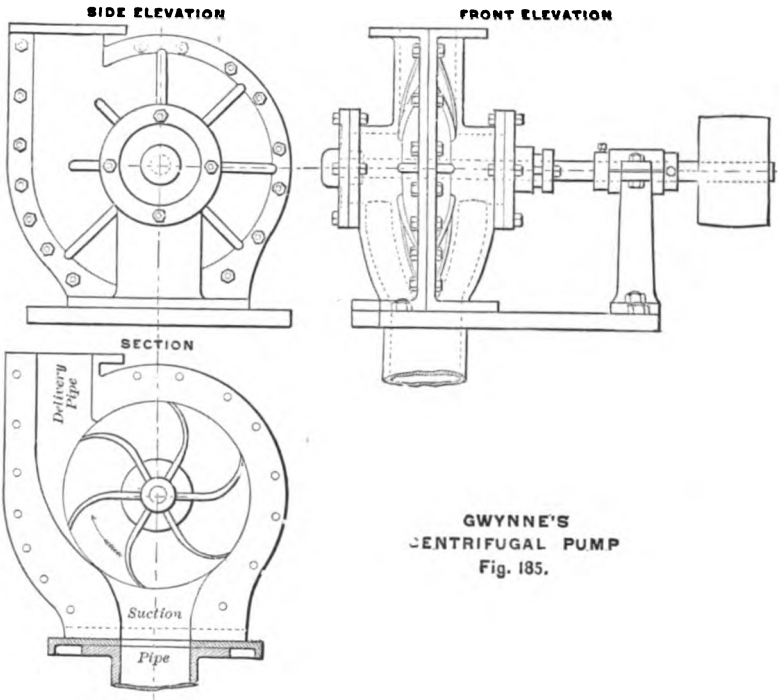

GWYNNE'S CENTRIFUGAL PUMP
Fig. 185.

Fig. 186 is a perspective view of the "Andrews' Anti-Friction Centrifugal Pump," as made by Joseph Edwards & Co. of New York. This is shown in partial section in Fig. 187.

"The arrows indicate the direction in which the disk turns. *A* is the inlet, *B* is the discharge; *C*, the bottom chamber, within which the disk *K* (see Fig. 188) with its propelling wings 1 to 8 revolve closely without touching.

"To chamber *C* are attached the conducting cases *D* and *D'*, which form between them an easy curved spiral discharge passage, gradually enlarging toward its outlet *B*. The shaft *G*, of fine hammered steel, passes through the stuffing-box *F*, thence

Digitized by Google

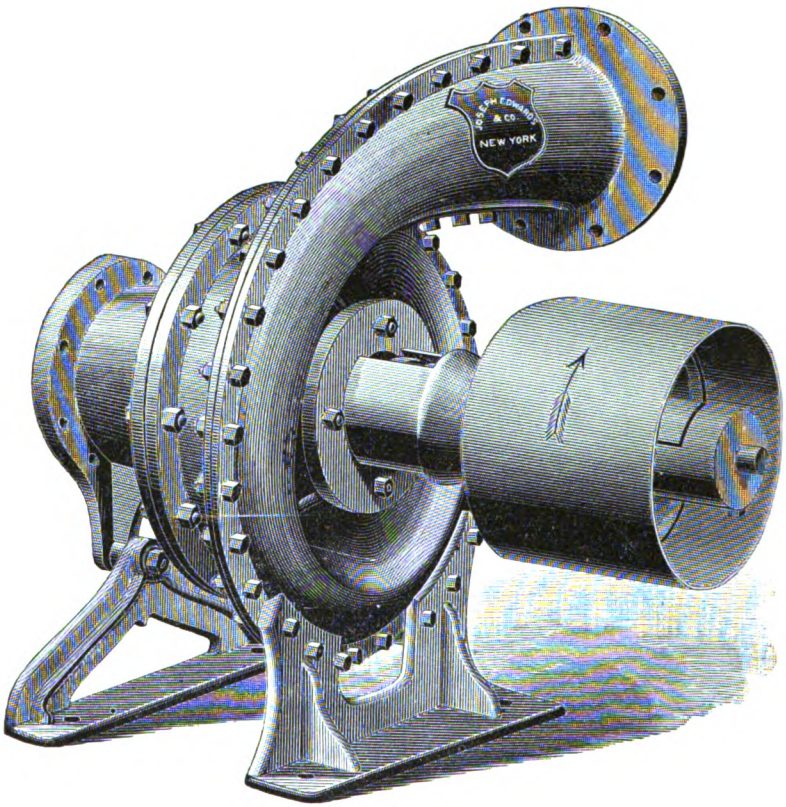

Fig. 186.

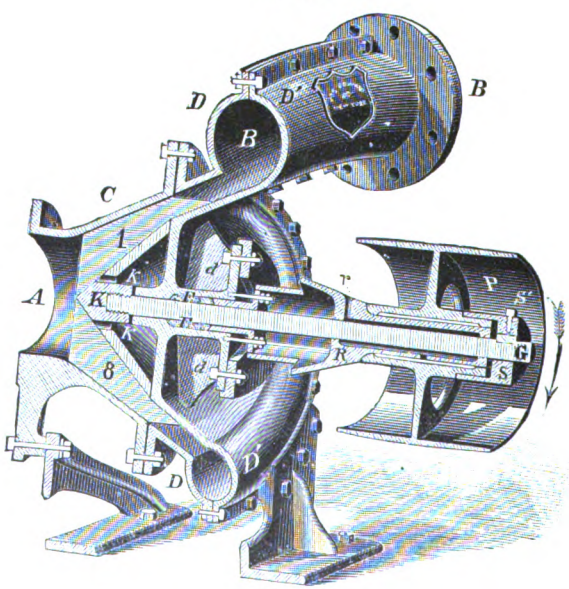

Fig. 187.

Digitized by Google

through and into the sleeve R, which is securely bolted by wide flanges to the case D', thus forming a perfectly central, rigid, and long bearing for the spindle. The driving-pulley P has its bearing babbitted and runs on the outer diameter of the sleeve R. S is the driving clutch secured to spindle by the feather-key and set-screw S', and engages by the lugs to the driving pulley. Ample means of lubrication is afforded by the oil-holes r.

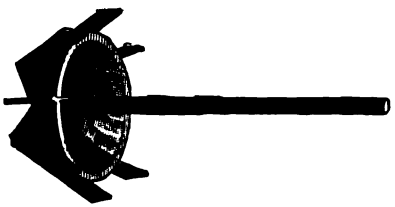

Disk K.
Fig. 188.

"The wings on disk K extend above the disk to exclude dirt from the bearings, and partially relieve the downward pressure upon the disk. The spaces above and below the disk are connected by holes kk through the disk, equalizing the vacuum therein, relieving it from downward pressure, and balancing it, so that no lower bearing or step is required."

Centrifugal pumps are to be preferred above the ordinary reciprocating type whenever the lift is not great.

Formula (1) applies to a reciprocating pump. In case a centrifugal pump is used for circulation, the inlet and outlet orifices should be proportioned by the formula

$$\text{Diameter} = 0.677\sqrt{\frac{Q}{c}} = 0.0098\sqrt{\frac{WH}{Rc}} \text{ in.}, \quad . \quad (3)$$

where c = coefficient of contraction = 0.62 for circular and 0.6 for square orifices (Rankine), Q = number of cubic feet of water used per minute, and W, H, and R have the values given in § 104.

The fan-wheel diameter, Fig. 185, should be such that the linear velocity of its lips will never be less than 400, and preferably about 500, feet per minute. If r = number of revolutions of fan-wheel per minute, D its diameter in inches, then

$$\frac{\pi D r}{12} = 500,$$

Digitized by Google

and

$$\text{Diameter of fan-wheel in inches} = D = \frac{1910}{r}. \quad . \quad (4)$$

The breadth of the blade at its tip

$$= \frac{Q}{4D} = \frac{Qr}{7640} \text{ inches.} \quad . \quad . \quad . \quad . \quad . \quad . \quad (5)$$

The water, after entering the fan-chamber with as little impulse as possible, should be gradually set in motion and gently delivered. The fan should be made of brass, or of wrought-iron cased in brass.

110. Design of the Feed-pump.—Feed-pumps, like air and circulating pumps, may be worked by the main engine, or

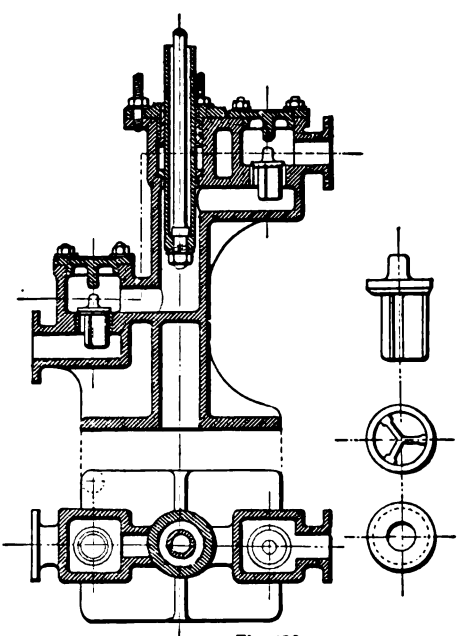

Fig. 189.

an independent steam-cylinder. Such a pump, having a 3-inch plunger, is shown in Fig. 189 (from Busbridge). The pump is designed by the following formulæ.

Digitized by Google

The feed-pump is designed to take water from the hot-well, or elsewhere, and deliver it into the boiler. The pump must be able to deliver five or six times the quantity of steam supplied to the engine in the same time.

Let W = the number of pounds of steam used by the engine per hour;
k = a constant, the number of times W which the feed-pump must be capable of delivering in one hour = 5 or 6 in general practice;
L = length of stroke of piston or plunger in inches;
S = number of delivering strokes of the feed-pump per minute;
d = diameter of piston or plunger in inches.

Then the number of cubic inches of water that the feed-pump must be capable of delivering per minute is

$$\frac{1728\,Wk}{60 \times 62.5} = \frac{\pi}{4} d^2 LS,$$

whence

$$\left.\begin{array}{l}\text{Diameter of the feed-pump piston or}\\ \text{plunger in inches}\end{array}\right\} = 0.766\sqrt{\frac{Wk}{LS}}. \quad . \quad (1)$$

An allowance of from 3 to 7 per centum should be made for slip or loss of action of the pump, by increasing W.

The area of the inlet or outlet orifice is, in square inches,

$$= A = \frac{Wk}{78000}. \quad . \quad . \quad . \quad . \quad . \quad . \quad . \quad (2)$$

Every feed-pump run by the main engine should have a relief-valve which will prevent the feed-pipe from being broken when the boilers are not receiving the feed-water. Such a valve is shown in Fig. 190. The valve is held in its seat by a spring and steam-pressure, both acting on its back. When the pressure in the feed-pump becomes greater than that holding the valve closed, the valve opens, and there is made a communication between the receiving and delivering ends of the pump, so that the pump causes the same water to pass through

Digitized by Google

its barrel so long as the valve is lifted. This relief-valve is sometimes called a "regurgitating" valve. As the feed-pump

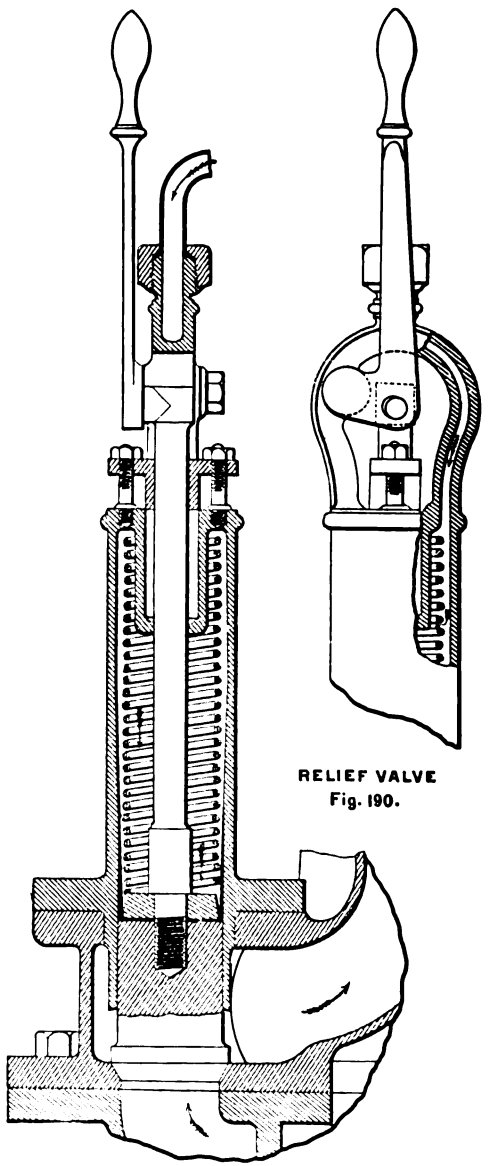

RELIEF VALVE
Fig. 190.

Digitized by Google

is now doing no work, the condensed steam is accumulating in the hot-well, until finally it will be able to exert a force sufficient to lift a hot-well relief-valve and discharge.

The hot-well relief-valve is usually of rubber, held down by a spring. The form of relief-valve shown in Fig. 190 will apply

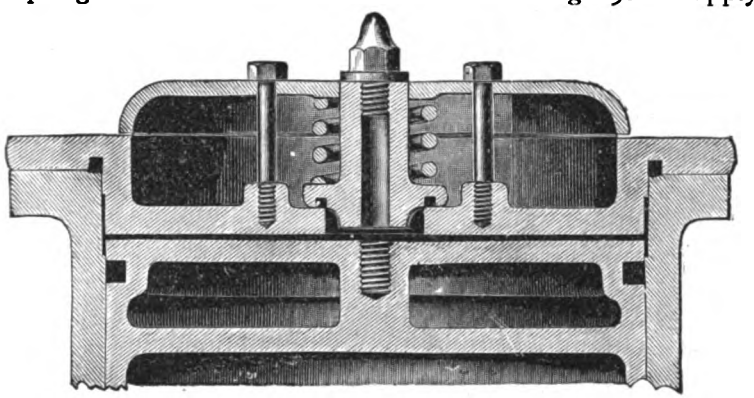

Fig. 191.

equally well to a steam-cylinder. A valve similar to that, used on the Westinghouse engine, Fig. 191, is, however, usually preferred for a steam-cylinder.

Strainers, put over the end of inlet pipes of pumps, are intended to prevent foreign matter entering the pump, and causing derangement in the operation of the valves. The M. T. Davidson diaphragm basket strainer is shown in Fig. 192. The strainer can be removed, freed from obstruction, and replaced by simply slacking one bolt, and without stopping the pump.

Other forms of strainers are shown, as applied to the Knowles pump, Fig. 193.

111. Flow of Water through Pipes.*

Let Q_1 = the number of cu. ft. of water to be pumped per sec.;

h = the greatest loss of head of water in feet, which corresponds to the greatest velocity and greatest flow of water through the delivery-pipe;

v = velocity of flow in the pipe in feet per second;

l = length of straight pipe in feet;

d = diameter of the pipe in feet.

* From Rankine's *Steam-Engine*, §§ 99, 108.

Digitized by Google

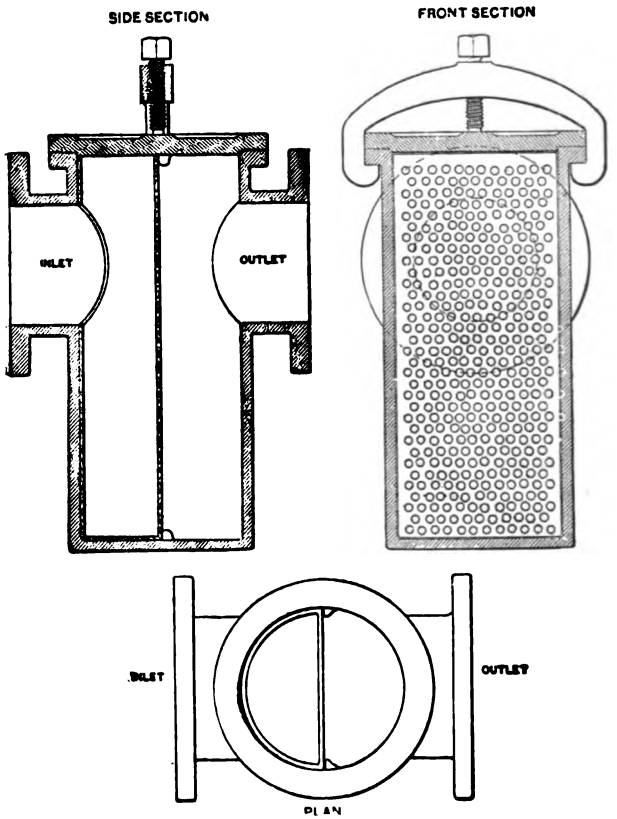

Fig. 192.

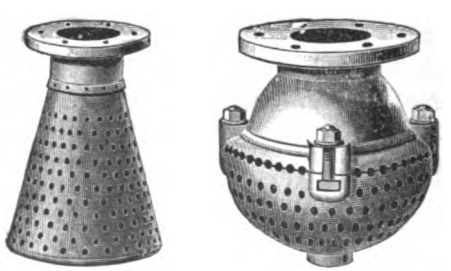

Galvanized Sheet-iron Strainer.

Combined Strainer and Foot-valve.

Fig. 193.

Digitized by Google

Then the *loss of head in a straight circular pipe* is

$$h' = \frac{4fl}{d} \cdot \frac{v^2}{64.4}, \quad . \quad . \quad . \quad . \quad . \quad . \quad . \quad . \quad (1)$$

in which f is a constant depending upon the diameter of the pipe and condition of its surface, or

$$f = 0.005 \left(1 + \frac{1}{12d}\right). \quad . \quad . \quad . \quad . \quad . \quad . \quad (2)$$

The loss of head for a bend in a circular pipe is

$$h'' = \frac{\alpha}{\pi} \left\{ 0.131 + 1.847 \left(\frac{d}{2r}\right)^{\frac{7}{2}} \right\} \frac{v^2}{64.4} \text{ (Weisbach)}, \quad . \quad (3)$$

in which α = angle through which the pipe is bent, r = radius of curvature of the bend in feet, d = as before, the diameter of the pipe in feet, $\pi = 180°$. Denote by k the parenthesis in eq. (3), so that

$$h'' = \frac{\alpha}{\pi} \cdot k \cdot \frac{v^2}{64.4};$$

the value of k is readily determined from the following table, where $n = \frac{d}{2r}$, viz.:

BENDS OF CIRCULAR CROSS-SECTION.

$$k = 0.131 + 1.847 \left(\frac{d}{2r}\right)^{\frac{7}{2}}$$

$n = \frac{d}{2r}$	K	$n = \frac{d}{2r}$	K
0.10	0.131	0.60	0.440
0.15	0.135	0.65	0.540
0.20	0.138	0.70	0.661
0.25	0.150	0.75	0.800
0.30	0.158	0.80	0.977
0.35	0.180	0.85	1.180
0.40	0.206	0.90	1.408
0.45	0.240	0.95	1.680
0.50	0.294	1.00	1.978
0.55	0.350		

Digitized by Google

Trautwine gives the following table, which applies to the formula (3), viz.:

HEADS REQUIRED TO OVERCOME THE RESISTANCE OF 90° CIRCULAR BENDS.

Velocity in feet per sec.	Radius of Bend in Diameters of Pipe.							
	0.5	0.75	1.00	1.25	1.5	2.0	3.0	5.0
	Head, in feet.							
1	.016	.005	.002	.002	.001	.001	.001	.001
2	.062	.018	.009	.007	.005	.005	.004	.004
3	.140	.041	.020	.015	.012	.011	.010	.009
4	.248	.072	.036	.026	.021	.019	.017	.016
5	.388	.113	.056	.041	.033	.029	.027	.025
6	.559	.162	.081	.059	.048	.042	.038	.036
7	.761	.221	.110	.080	.066	.057	.052	.050
8	.994	.288	.144	.104	.086	.074	.069	.065
9	1.260	.365	.182	.132	.108	.094	.086	.082
10	1.550	.450	.225	.163	.134	.116	.106	.101
12	2.240	.649	.324	.235	.192	.167	.153	.145

The velocity of the water in the pipes is

$$v = \frac{Q_1}{\frac{\pi}{4} d^2},$$

and the head due to this velocity is

$$\frac{v^2}{64.4} = \frac{Q_1^2}{39.73 d^4};$$

which, being introduced into eq. (1), gives

$$h' = \frac{4 f l Q_1^2}{39.73 d^5},$$

and

$$d = \text{diameter of pipe in feet} = \sqrt[5]{\frac{4 f l Q_1^2}{39.73 h}}. \quad . \quad . \quad (4)$$

Digitized by Google

But f depends upon d for its value, and d is unknown. Rankine suggests that d be obtained by a tentative process, and uses the following formulæ, in which

d' = approximate value of d;
f' = one approximation of $f = 0.00645$;

then the *first approximation* gives for diameter of the pipe

$$d' = 0.2304 \sqrt[5]{\frac{lQ_1^2}{h}}.$$

This value of the diameter is to be substituted in equation (2) to find a corrected value of f, which, when employed in equation (4), gives a *second approximation* to the diameter, which should be accurate enough for pump-fittings.

112. Design of a Pump to deliver against a Head of Water.

Let h_1 = difference of level in feet between the surface of water in the receiving and delivering basins;
h' = loss of head in feet due to friction of straight pipe;
h'' = loss of head in feet due to friction of one bend;
m = number of bends of radius r feet, angle α;
v = velocity of flow in feet per sec.;
Q_1 = quantity of flow in cu. ft. per sec.;
δ = weight of a cubic foot of the fluid pumped,
= 62.5 lbs. for fresh water.

Then the total head of water to be overcome by the engine is

$$h_1 + h' + mh'', \quad \ldots\ldots\ldots \quad (1)$$

and the pressure per square inch equivalent to this head is

$$p = \frac{\delta(h_1 + h' + mh'')}{144} \text{ lbs.} \quad \ldots\ldots \quad (2)$$

Digitized by Google

The formula should be used in designing the piston, piston-rod, and thickness of barrel for a pump. We will illustrate by the following

EXAMPLE.—Given a single-acting plunger feed-pump of 4.5 in. diameter, stroke 42 in., making 65 delivering strokes per min., and doing full duty delivering, by the aid of an air-chamber, a nearly uniform flow of water of 400 cu. ft. per min. through a three-inch pipe 80 ft. long, having 10 right-angled bends of $\frac{3}{4}$-ft. radius, into a boiler against a steam-pressure of 95 lbs. absolute. Difference of level between surface of water in receiving basin and water-line of boiler is 6 ft. Find the total head of water equivalent to the resistance overcome by the pump.

By equation (1) of the preceding article the loss of head in the 80 feet of straight pipe is

$$h' = \frac{4f \times 80}{\frac{1}{4}} \cdot \frac{(\frac{400}{60})^2}{64.4} = 3.72 \text{ feet},$$

since

$$f = 0.005\left(1 + \frac{1}{12 \times \frac{1}{4}}\right) = \frac{1}{150}.$$

By the second table of the preceding article, since the velocity per sec. $= \frac{400}{60} = 6\frac{2}{3}$ ft., and the radius of bend is three times the diameter of the pipe, the loss of head due to 10 right-angled bends is

$$h'' = 10 \times 0.047 = 0.47 \text{ feet}.$$

The head due to the resistance of feed-pipe is

$$3.72 + 0.47 = 4.19 \text{ ft. of water}.$$

But the difference of level between the centre of the plunger and the water-line of the boiler is 6 feet; therefore the total head to be overcome, exclusive of the pressure of steam, is

$$4.19 + 6.00 = 10.19 \text{ ft. of water}.$$

Digitized by Google

By formula (2) the pressure per sq. inch equivalent to this head is

$$\frac{62.5 \times 10.19}{144} = 4.4 \text{ lbs.}$$

Hence the intensity of pressure on the feed-pump plunger is

$$4.4 + 95 = 99.4 \text{ lbs.}$$

This, then, is the intensity of pressure to be used in §§ 76, 77 for dimensioning the thickness of bushing, plunger, and diameter of the pump-rod.

The velocity of flow through a pipe should not be high since the frictional resistance varies directly as the square of the velocity. For short pipes, as in the example above, this item is not considerable, but for a long water-main it becomes excessive.

The greatest *economical* velocity of flow through supply or distribution pipes of a system of water-works is, according to Fanning:

Diameter in inches.	4	6	8	10	12	14	16	18	20	22	24	27	30	33	36
Velocity in ft. per. min.	150	168	180	198	210	234	252	270	282	300	318	348	372	396	420

Digitized by Google

CHAPTER XIV.

ENGINE-FRAME, PILLOW-BLOCKS, REVERSING ENGINE, PIPES, STOP-VALVES, COCKS, EXPANSION JOINT, SCREW-THREADS.

113. Foundations should be so designed that rigidity, strength, and stability are secured. For stationary engines the

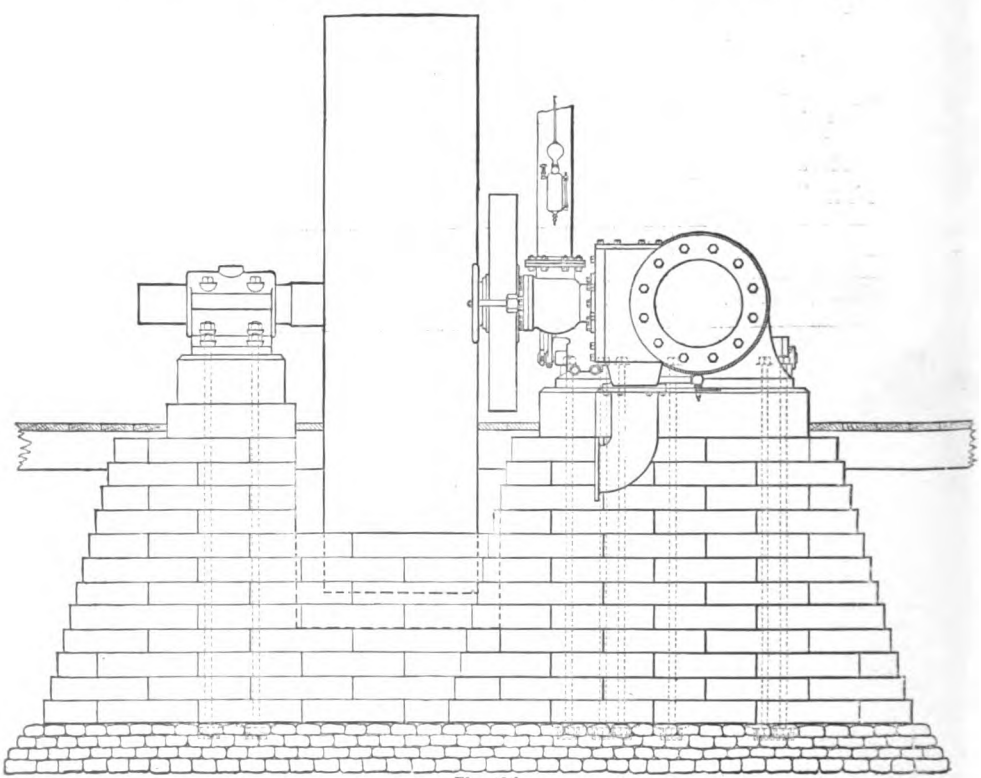

Fig. 194.

Digitized by Google

foundations are made of ashlar, rubble, concrete, brick, etc. It is always well to have a heavy capstone. The holding-down bolts pass through the foundation, and the nut may either be under it or recessed in a pocket on the side. The founda-

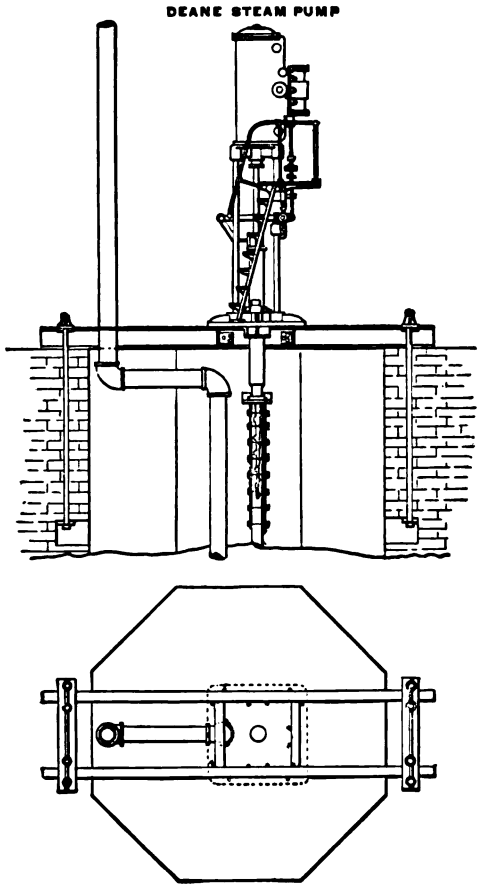

Fig. 195.

tion should always be deep, and large enough to give a good supporting surface.

For this purpose it will be necessary to know the weight of the engine and the safe load on a square foot of the particular materials used.

Digitized by Google

Bricks, however, are cheaper than dressed stone, and will make an excellent foundation provided they are hard, with plane, parallel faces and sharp angles, and regular in size and properly laid. They should be wet with about 6 per cent of their weight of water, and then laid in cement, care being taken to float them in the mortar so that all spaces will be filled. The engine should not be erected until the cement has set. It is a bad practice to grout the foundation, for if good work has been done there is no need of it, and it is economy to have only first-class work in a foundation.

The safe resistance to crushing of foundation materials is, on the authority of Gillmore:

Brickwork masonry,	70	lbs.	per	sq.	in.,	or	5	tons	per	sq. ft.
Concrete "	55	"	"	"	"	"	4	"	"	"
Sandstone "	104	"	"	"	"	"	7.5	"	"	"
Granite "	140	"	"	"	"	"	10	"	"	"

The foundation should always be carried down to get a good bearing-surface. Clay, rock, and compacted loam, free from moisture, will give no trouble; but when the material is pervious, or where quicksand is found, it will be necessary to excavate and fill in with either puddle or concrete. Bearing-piles may be used, concrete being filled in between the tops, or a grillage built on them, or both.

The foundation for a marine engine is called a keelson, and, if of wood, the framing is usually secured by holding-down bolts having nuts recessed in the sides. The keelson used must be strong enough to sustain the compressive load of the engine, and deep enough to prevent the holding-down bolts from being torn out as the ship pitches and rolls.

Fig. 196 shows the holding-down bolts of the engine of the tugboat *Samara*. The eye-bolts *A*, *A*, after passing through the engine-frame's footing, are secured to horizontal through-bolts, passing through the wrought-iron box keelson as shown. It is customary in very large engines to cushion the engine framing by putting strips of wood between the engine frame and its foundation.

Digitized by Google

114. Engine Frames are made in various forms for various uses. They are usually of cast-iron, which gives great rigidity. In case a tensile or transverse stress is exerted upon the frame, the use of wrought-iron or cast-steel is to be preferred, for, otherwise, the parts must be bulky.

The bed-plate for a vertical engine contains, as in Fig. 172, the facing for the columns, condenser, etc., and the crank-shaft bearings. In this case the bed-plate is under the whole of the engine. Sometimes, however, the bed-plate contains only the shaft bearings, and the condenser and columns are secured

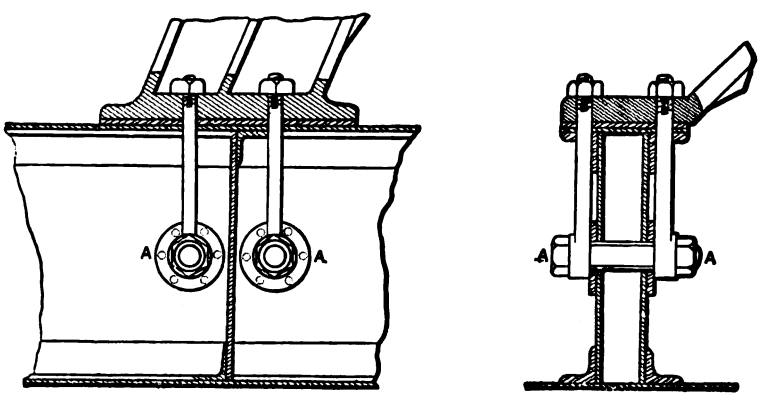

Fig. 196.

directly to the foundation. When this latter form is used, great care must be exercised if the framing is subjected to a transverse strain, as in the marine service, due to the motion of the vessel.

Horizontal engines have the cylinders either attached to a bed-plate, or directly to the foundation. If a bed-plate is used, it is under all of the engine. If a bed-plate is not used for the cylinder, a framing is attached to the end of the cylinder, and, besides carrying the crank-shaft bearing, it may or may not support the condensers and pumps.

Since the designing of the engine frame is not yet out of the range of empiricism, and the forms used are so manifold,

Digitized by Google

we will not attempt to analyze the stresses exerted and deduce formulæ for the proportion of parts. But the columns for a vertical engine, and the framework between the cylinders and the crank-shaft for a horizontal engine, must be so proportioned that the tensile and compressive strains exerted at alternate strokes of the piston may be provided for.

For this purpose the columns of a vertical engine are subjected on the down stroke to a thrust equal to the weight supported minus the load on the piston, while the load on the up stroke is their sum. In the former case the stress may be tension or compression according as the load on the piston is greater or less than the dead weight of parts. Columns which are strong enough will not always be found rigid enough. Wrought-iron is sometimes used on account of the low tensile strength of cast-iron. Some prefer a hollow cast-iron column containing a wrought-iron support; but it is almost impossible to secure the wrought-iron column to the foundation and cylinder; besides, the metals expand unevenly.

The following formula for a long column fixed at its ends and subjected to crushing is to be used:

P = ultimate crushing load in pounds;
S = sectional area of the column in square inches;
f = coefficient of strength = 36000 for wrought-iron and 80000 for cast-iron;
a = a constant = $\frac{1}{3000}$ for solid circular or rectangular section of wrought-iron, $\frac{1}{8000}$ for a hollow cylinder of cast-iron, $\frac{1}{4000}$ for a solid cylinder of cast-iron;
l = length of column in inches;
d = diameter of column in inches.

Then the Gordon-Hodgkinson formula is

$$P = \frac{fS}{1 + a\frac{l^2}{d^2}} \quad \ldots\ldots\ldots \quad (1)$$

A wrought-iron column is stronger than one made of cast-

Digitized by Google

iron when the ratio of l to d exceeds twenty-seven. The factor of safety should vary from six to ten.

The column, if it gives a surface for the guides, is subjected to a transverse load whose intensity is represented by N in Fig. 130. Its amount is

$$N = P \tan \phi.$$

The engine frame, for a horizontal engine, between the cylinder and crank-shaft bearings is subjected to the load N, which is supported by the foundation, and a tensile and compressive stress, P, at alternate strokes of the piston. Hence the cross-section of the frame must be large enough to give a safe resistance to these stresses.

Forms of engine frames are given in Figs. 195, 194, 182, 172, 162, 126, 92, 91, 86, 85, and 78. The tendency in designing engine frames is toward the introduction of wrought-iron whenever practicable. Phœnix columns and other forms are sometimes used.

115. Pillow-blocks are made of cast-iron, and long enough to support the journal. Forms are shown in Figs. 162, 164, 165, and 172. For horizontal engines they must be so made that they can be moved along the shaft, or transversely to it, if necessary, as the journals or boxes become worn. The wear being in the top and bottom for vertical engines, a vertical movement only is needed for this type of engines.

The crank-shaft bearing must be made as rigid as possible, for otherwise the shaft, though strong enough to withstand the torsional and bending stresses upon it, will spring at a bearing and break.

The Brasses are made in various forms and of various materials, as shown in the table in § 84.

It is well to have the under brass cylindrical so that it can be readily removed without lifting the shaft from all its bearings.

Seaton gives the following proportions for brasses:

Thickness in the crown, if of bronze = 0.11 × diam. of journal;
" " " if of cast-iron = 0.15 × diam. of journal.

Digitized by Google

When fitted with strips of white metal:

Thickness of strips = 0.04 × diameter of journal + $\frac{1}{8}$ inch;
Breadth of strips = 0.16 × " " + $\frac{1}{2}$ inch;
Space between strips = thickness of strips.
Thickness of metal beyond strips = 0.065 diameter of journal, if of brass;
Thickness of metal beyond strips = 0.12 diameter of journal, if of cast-iron.

The Caps for Crank-shaft Bearings may be made of wrought- or cast-iron. They are in the condition of a beam loaded in the centre, with a pressure equal to the maximum crank effort, and supported at the ends. The length along the shaft is equal to the length of the journal, while, transversely, the width is about twice the diameter of the shaft. On account of the weight of the shaft, fly-wheel, etc., between bearings, we will suppose for safety the maximum load on the piston is equal to the load on the cap. Let this load = P, and

$2d$ = width of the cap in inches;
d = diameter of the shaft in inches;
l = length of cap along the shaft in inches;
f' = factor of safety;
$\frac{1}{100}$ = greatest deflection allowable in inches;
E = modulus of elasticity;
I = moment of inertia of section = $\frac{lt^3}{12}$;
t = thickness of cap at its crown in inches.

Then, for *rigidity* (by § 300, Rankine's *Applied Mechanics*),

$$\frac{1}{100} = \frac{Pd^3f'}{6EI} = \frac{2Pd^3f'}{Elt^3}.$$

$$\text{Thickness of cap in inches} = 5.85d\sqrt[3]{\frac{Pf'}{El}},$$

in which E = 28000000 for wrought-iron, 42000000 for steel, and 18000000 for cast-iron.

Digitized by Google

When the cap is designed for rigidity, it will have ample strength.

The following formula is given by Seaton:

$$\text{Thickness of cap} = t = d' \sqrt{\frac{l'f}{b}} \text{ inches,}$$

in which

d' = diameter of cap-bolts in inches;
l = pitch of cap-bolts in inches;
b = breadth of cap, in inches;
f = 1 for wrought-iron and 2 for cast-iron.

Cap-bolts, used for securing the cap to the pedestal, must have a tensile strength equal to the load P.

Let d = diameter of bolt in inches;
5000 = safe tensile strength of the metal in bolt.

Since the bolts on one side may not be set up as tight as those on the other side of the shaft, we may suppose that $\frac{2}{3}$ of P may come on the bolts on one side.

Then, if only two bolts are used in securing the cap,

$$5000 \frac{\pi}{4} d^2 = \frac{2}{3} P,$$

and

$$d = \frac{\sqrt{P}}{76.75}.$$

If, however, there are two bolts on each side, $\frac{1}{8}$ of P will be the stress on each, and

$$d = \frac{\sqrt{P}}{108.54}.$$

116. Distance between Shaft Bearings may be so proportioned that the deflection of the shaft may not exceed a certain desired amount.

Digitized by Google

Let D = greatest allowable deflection in inches:

d = diameter of the shaft in inches:

ω = weight of one cubic inch of the shaft
= 0.2816 lbs. for ordinary wrought-iron:

$\omega \frac{\pi}{4} d^2 = 0.2211 d^2$ = weight of shaft per inch of length:

W = weight of fly-wheel, pulley, etc., keyed to the shaft midway between the bearings, in pounds:

E = modulus of elasticity = 28000000 for wrought-iron:

I = moment of inertia of section of shaft = $\frac{\pi d^4}{64}$:

l = distance between centres of bearings in feet.

Then, for a beam uniformly loaded with $2.6532 d^2$ pounds per foot of length, and W pounds at the middle, and supported at the ends, the deflection is, by mechanics,

$$D = \frac{60 d^2 l^4 - 36 W l^3}{EI}.$$

The limiting deflection for wrought-iron being $\frac{1}{100}$ in. per foot of length, $D = \frac{l}{100}$ in.; whence, by substituting values of E and I, we have

$$l = 236 \frac{d^2}{l^2} - 0.6 \frac{W}{d^2}. \quad . \quad . \quad . \quad . \quad . \quad . \quad . \quad (1)$$

When there is no external load, $W = 0$, and

$$l = 6.2 \sqrt[3]{d^2}. \quad . \quad . \quad . \quad . \quad . \quad . \quad . \quad . \quad . \quad (2)$$

The following table is deduced from equation (2):

d. Diameter of shaft in inches.	l. Distance between bearings, in feet.	d. Diameter of shaft, in inches.	l. Distance between bearings, in feet.
1	6.2	10	28.8
2	9.8	11	30.6
3	12.9	12	32.5
4	15.6	13	34.2
5	18.1	14	36.0
6	20.4	15	37.7
7	22.6	16	39.4
8	24.8	17	41.0
9	26.9	18	42.6

Digitized by Google

The distances found by the table are to be multiplied by 1.06 for steel and 0.8 for cast-iron shafts.*

When there is an external load, equation (1) is to be used. If the loads are not midway between the bearings, the problem may be solved separately, or the weights may be reduced to their equivalent weights concentrated at the centre of length. In either case it is necessary to know the value of the ratio $\frac{d^2}{l^2}$. This may, for a first approximation, be taken from the table, and l computed. This new value of l may then be substituted for l in $\frac{d^2}{l^2}$, and a second approximate value of l computed. In general, a second approximation is sufficiently exact.

117. Power required for Reversing- and Pumping-engines.

CASE I. *Steam-reversing Gear.*—The steam-reversing cylinder, if one is used, should be powerful enough to change the position of the link and valve of the main engine in 30 seconds.

Let p_B = gauge-pressure of steam direct from the boiler;
A = area of reversing cylinder in square inches;
S = stroke of reversing cylinder in inches;
L = length of valve in inches;
B = breadth of valve in inches;
t = travel of valve in inches;
p_1 = maximum pressure of steam in valve-chest
= $p_B + 15$, for condensing engines having a perfect vacuum;
ϕ = coefficient of friction of valve = $\frac{1}{3}$; (See § 39.)
W = inch-pounds of work done in moving the valve;
n = number of similar valves moved.

Then, for non-compound engines,

$$W = p_B A S = \frac{n p_1 B L t}{5}.$$

* Since deducing the foregoing table, the author has found that Mr. D. K. Clark, in his *Rules and Tables*, gives similar results, differing somewhat on account of his using a smaller factor of safety.

Digitized by Google

But, since this does not provide for the friction of the valve-gear, it will be necessary to increase W about $\frac{1}{3}$ times, whence

$$A = \frac{0.3np_1BLt}{p_BS}.$$

For a two-cylinder compound engine,

$$p_BAS = \frac{p_1BLt}{5} + \frac{p'B'L't}{5},$$

or, allowing for friction of valve-gear,

$$A = 0.3t\{p_1BL + p'B'L'\};$$

where p', B', and L' refer to the low-pressure valve.

CASE II. *Steam-cylinder of Pumps.*—Steam usually follows full stroke in small pumps. The boiler-gauge pressure is the unbalanced intensity of effort on the steam-piston.

Let p_B = unbalanced pressure on a sq. in. of steam-piston;
p = mean unbalanced pressure on a sq. in. of water-piston;
D = diameter of steam-piston in inches;
d = diameter of water-piston in inches;
S = length of stroke in feet;
n = number of strokes per minute to deliver Q pounds of water per minute.

Then the diameter of the steam-cylinder is

$$D = d\sqrt{\frac{p}{p_B}},$$

and the horse-power of the pump is

$$\text{H. P.} = \frac{p_B\frac{\pi}{4}SnD^2}{33000} = \frac{p_B\frac{\pi pd^2}{4p_B}S \times 1728Q}{33000 \times 62.5 \times \frac{\pi d^2}{4} \times S \times 12} = \frac{pQ}{14323}.$$

Digitized by Google

An efficiency coefficient of, say, 0.75 should be introduced, making

$$\text{H. P.} = \frac{pQ}{10700}.$$

In case steam acts expansively in the steam-cylinder of the pumping-engine, the mean unbalanced pressure is to be used for p_B above.

118. Size and Strength of Pipes.—The following table is for *Wrought-iron Welded Tubes*, for steam or water. Under one inch they are butt-welded and tested to 300 lbs. per sq. in., hydraulic pressure. Pipes 1¼ in. and upwards are lap-welded, and tested to a hydraulic pressure of 500 lbs. to the sq. in.

WROUGHT-IRON WELDED PIPES.—[HASWELL.]

Nominal size.	Outside diameter, standard.	Inside diameter, standard.	Weight per foot, pounds.	Threads to one inch.	Inside cross-section of tube in sq. inches.
⅛	0.40	0.27	0.24	27	0.0572
¼	0.54	0.36	0.42	18	0.1018
⅜	0.67	0.49	0.56	18	0.1886
½	0.84	0.62	0.85	14	0.3019
¾	1.05	0.82	1.12	14	0.5281
1	1.31	1.04	1.67	11½	0.8495
1¼	1.66	1.38	2.25	11½	1.4957
1½	1.90	1.61	2.69	11½	2.0358
2	2.37	2.06	3.66	11½	3.3329
2½	2.87	2.46	5.77	8	4.7529
3	3.50	3.06	7.54	8	7.3529
3½	4.00	3.54	9.05	8	9.8423
4	4.50	4.02	10.72	8	12.6924
4½	5.00	4.50	12.49	8	15.9043
5	5.56	5.04	14.56	8	19.9504
6	6.62	6.06	18.77	8	28.8426
7	7.62	7.02	23.41	8	38.7048
8	8.62	7.98	28.35	8	50.0146
9	9.68	9.00	34.07	8	63.6174
10	10.75	10.01	40.64	8	80.1186

The foregoing table has been worked out from the following formula,* in which

d = internal diameter of pipe in inches;

t = thickness of pipe in inches;

* § 271, Rankine's *Applied Mechanics*.

Digitized by Google

p = pressure exerted by the fluid in lbs. on a sq. in.;
f = safe tensile strength of the metal used = 5000 for wrought-iron, and 2500 for cast-iron or brass (which allows a factor of safety of 8).

Then

$$t = \frac{pd}{2f} \quad . \quad . \quad . \quad . \quad . \quad . \quad . \quad . \quad . \quad (1)$$

Copper Pipes are to be brazed or solid drawn, and may be proportioned by this formula if $\frac{1}{8}$ inch is added to the value obtained by giving f a value of from 4000 to 5000, whence the formula becomes

$$\text{Thickness of a copper pipe} = \frac{pd}{8000 \text{ to } 10000} + \tfrac{1}{8} \text{ in.} \quad . \quad (2)$$

Also,

$$\text{Thickness of a wrought-iron pipe} = \frac{pd}{10000}; \quad . \quad . \quad (3)$$

$$\text{Thickness of a brass or cast-iron pipe} = \frac{pd}{5000} \quad . \quad . \quad . \quad (4)$$

Flanges are made of tough brass for copper pipes, and of wrought-iron or brass for wrought-iron pipes.

Thickness of flange = { 4 × thickness of the pipe / = diameter of bolts used.

Width of flange = 9 × thickness of the pipe.

Pitch of bolts for steam or water pressure } = 5 × thickness of pipe.

Pitch of bolts for exhaust steam = 6 × thickness of pipe.

The following formulæ and table, from a paper by J. E. Codman, C.E. (*Pro. of Engineer's Club of Philadelphia*, vi., No. 3), will apply to *cast-iron pipes and flanges* subjected to a water-pressure.

When D = inside diameter of the pipe, we have

Diameter of flange = $1.125D + 4.25$ (take nearest $\frac{1}{4}$ inch);
Diameter of bolt circle = $1.092D + 2.566$ (take nearest $\frac{1}{4}$ inch);
Diameter of bolts = $0.011D + 0.73$ (take nearest $\frac{1}{8}$ inch):

Digitized by Google

Number of bolts $= 0.078D + 2.56$ (take nearest even number);

Thickness of flange $= 0.033D + 0.56$ (take nearest $\frac{1}{16}$ inch);

Thickness of pipe $= 0.023D + 0.327$ (take nearest $\frac{1}{32}$ inch);

Weight of pipe in pounds per running foot $= 0.24D^2 + 3D$;

Weight of flanges and bolts at one joint $= 0.001D^3 + 0.1D^2 + D + 2$.

CAST-IRON PIPES.

Inside Diameter of Cast-iron Pipe in Inches.	Thickness in Inches of		Diameter of Bolts in Inches.	Number of Bolts.	Diameter of Bolt-circle in Inches.	Diameter of Flange in Inches.	Remarks.
	Pipe.	Flange.					
2	0.373	$\frac{5}{8}$	$\frac{3}{4}$	4	$4\frac{3}{4}$	$6\frac{1}{2}$	The tensile strength of cast-iron is here taken as 15,000 lbs., ultimate, and the pressure as 100 lbs. per sq. inch. If the pressure is to be 150 lbs., the results given should be increased in the ratio of $\frac{150}{100} = 1.5$. If the tensile strength is taken as 1800, the results should be decreased in the ratio of $\frac{15000}{18000} = 0.833$. The results allow for a factor of safety of 5.
3.....	.396	$\frac{5}{8}$	$\frac{3}{4}$	4	$5\frac{7}{8}$	$7\frac{1}{2}$	
4.....	.420	$\frac{11}{16}$	$\frac{3}{4}$	6	7	9	
5.....	.443	$\frac{3}{4}$	$\frac{3}{4}$	6	8	$9\frac{3}{4}$	
6.....	.466	$\frac{3}{4}$	$\frac{3}{4}$	8	$9\frac{1}{8}$	$10\frac{3}{4}$	
8.....	.511	$\frac{13}{16}$	$\frac{3}{4}$	8	$11\frac{3}{8}$	$13\frac{1}{4}$	
10.....	.557	$\frac{7}{8}$	$\frac{3}{4}$	10	$13\frac{1}{4}$	$15\frac{1}{4}$	
12.....	.603	$\frac{15}{16}$	$\frac{7}{8}$	12	$15\frac{3}{4}$	$17\frac{3}{4}$	
14	.649	1	$\frac{7}{8}$	14	18	20	
16.....	.695	$1\frac{1}{16}$	$\frac{7}{8}$	16	20	22	

Perhaps the most accurate formula for the thickness of a cast-iron water-pipe is that given by Fanning:

$$t = \frac{(p + 100)d}{0.4S} + \frac{1}{3} \cdot \left(1 - \frac{d}{100}\right),$$

where t = thickness in ins., d = diameter in ins., p = pressure in lbs. per sq. in., and S = ultimate tensile strength of cast-iron, or about 18,000 lbs.

119. Distance between Hangers for a Pipe. — The hangers * for a pipe should be so constructed that the pipe can freely move through them as it expands and contracts.

The distance between hangers may be found from the fol-

* Forms of pipe-hangers are shown in the *Locomotive* for 1888, also *The American Engineer*, 1888.

Digitized by Google

lowing formula for the deflection of a beam of uniform section and uniform load, or

$$D = \frac{5Wl^4}{384EI}$$

in which

D = deflection in inches;
W = weight of pipe per inch of length in pounds;
l = distance between hangers in inches;
E = modulus of elasticity = 28000000 for wrought-iron, 18000000 for cast-iron, and, probably, 16000000 for copper tubes;
I = moment of inertia of a section of tube $= \frac{\pi d^4}{64}\left(\frac{d_1^4}{d^4} - 1\right)$;
d_1 = external diameter of pipe $= d + 2t$;
d = internal diameter of pipe;
t = thickness of pipe, all in inches.

Therefore

$$l = 2.96\sqrt[4]{\frac{DIE}{W}} \text{ inches.}$$

The safe tensile strength of a section of the hangers must be sufficient to support the weight of a pipe, Wl.

120. Design of Stop-valves.—(See Fig. 197.) *The lift of the valve* must be sufficient to give a free passage to the fluid.

Let A = area of the valve;
d = diameter of valve-seat;
x = necessary lift.

Then

$$\pi dx = A = \pi\frac{d^2}{4}.$$

$$\text{Lift} = x = \frac{d}{4}. \quad \ldots\ldots\ldots \quad (1)$$

The usual form for the valve casing is spherical.

The thickness of the valve casing may be found from the formula *

$$t = \frac{pd}{4f}, \quad \ldots\ldots\ldots \quad (2)$$

* Thin hollow sphere, § 272, Rankine's *Applied Mechanics*.

Digitized by Google

where

p = pressure of fluid in lbs. per sq. inch;

d = diameter of the sphere in inches;

f = *safe* bursting strength of the material = 2500 for cast-iron or brass. (Factor of safety here is about 8.)

The valve proper is usually ribbed, and is to be designed by the formulæ for the steam-piston given in §§ 11 and 12. In estimating the total pressure on the valve, due regard must be given to the strains produced when the valve is jammed in its

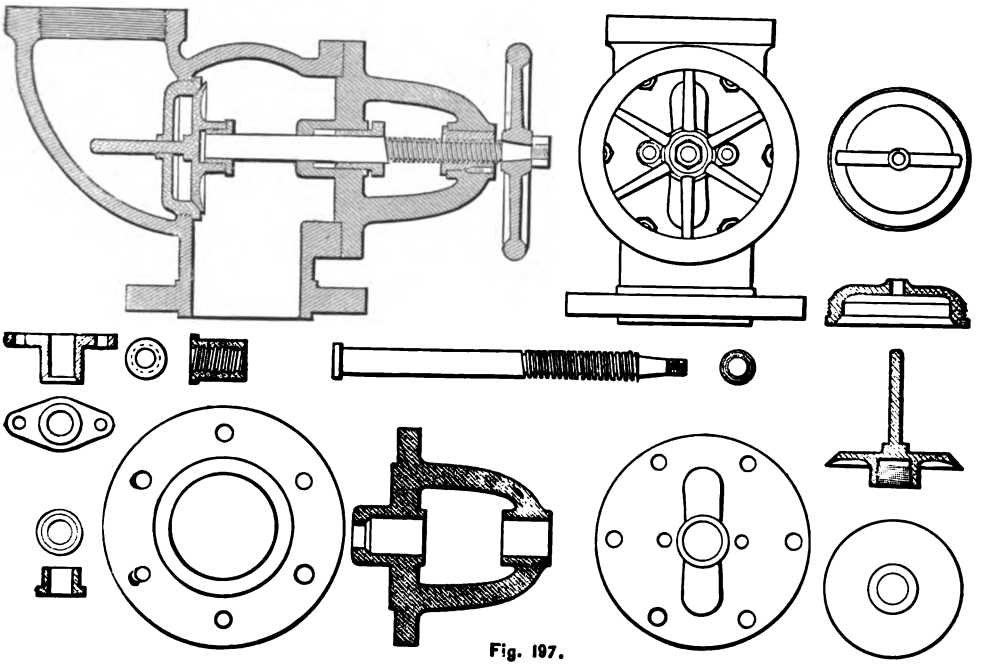

Fig. 197.

Throttle-valve of the Ball Engine.

seat by hand-power. The relation between the hand-power and the stress exerted on it is

$$\frac{\text{Power exerted by hand}}{\text{Resulting stress on valve}} = \frac{\text{Pitch of valve-stem thread, in.}}{\text{Circum. of hand-wheel, in.}}. \quad (3)$$

The opening at the top of the valve-chest must be large enough to admit the valve and its seat.

Digitized by Google

The thickness of the bonnet must be determined by the formula given in § 14 for the cylinder-head.

The stuffing-box is to be proportioned by the methods given in § 38.

The bonnet-bolts are pitched at about five diameters, and the safe tensile strength of their total effective section is equal to the load on the bonnet due to the pressure of the fluid plus the reaction of the stress exerted by the hand in jamming the valve in its seat.

The valve-stem is to have a safe crushing strength of section equal to the pressure on the valve plus the power exerted by the hand in jamming the valve in its seat, and it should be strong enough to resist a power four times that found by using equation (3).

The length of the thread on the valve-stem is equal to the depth of the nut + lift of the valve + clearance of $\frac{1}{8}$ to $\frac{1}{4}$ inch.

The diameter of the hand-wheel is usually equal to the inside diameter of the valve casing, or it may be determined from formula (3) by solving for its circumference, and then its diameter. In this case the "resultant stress on the valve" in (3) becomes the pressure of the fluid on the valve.

Dimensions of *flanges and their bolts*, used in connecting the valve to pipes, are to be taken from the preceding article.

121. Design of Cocks.—*The thickness of the plug and casing* may be found from the formula for pipes, § 118, equation (1).

The dimensions of the *stuffing-box* are determined from § 38.

The diameter of stem of the plug may be found as follows:

When d = diameter of plug stem in inches;
f = safe strength of the stem, in pounds per square inch of section, to resist torsion;
P = power exerted by the hand at the end of a lever = l;

then, from § 91, Case I,

$$d = \sqrt[3]{\frac{5.1Pl}{f}} \quad \ldots \ldots \ldots \quad (1)$$

Digitized by Google

The length of the hand lever, l, will depend upon the pressure exerted in screwing up the stuffing-box gland, and the weight and taper of the plug. It is impossible to estimate the pressure, as it will vary with the condition of the rubbing surfaces, packing used, and the character of the fluid passing through the pipes. If, however, by any possible means the amount of the load, *W*, on the plug can be ascertained, the moment of friction of the convex surface (where ϕ = coefficient of friction, a = radius of larger base of the frustum, b = radius of small base, and α = angle at vertex of cone) is

$$\frac{2}{3}\phi W \frac{a^3 - b^3}{a^2 \sin \alpha} \text{ inch-pounds.}$$

This is to be equated equal to $2\pi Pl$, from which l is determined.

Donaldson gives the following table for the proportions of cocks, the letters referring to Fig. 198.

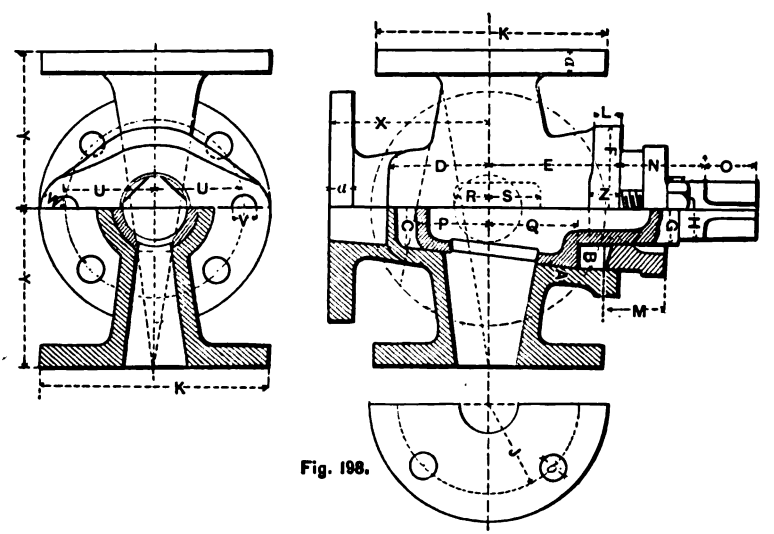

Fig. 198.

In the illustration two forms of cocks are shown. One is a "straight way," while the other forms a bend in the pipe.

Digitized by Google

PROPORTIONS OF COCKS. [FIG. 198.]

Diam of Pipe in Inches.	1	1¼	1½	1¾	2	2¼	2½	2¾	3	3½	4	
A	¼	¼	¼	5/16	5/16	5/16	⅜	⅜	7/16	7/16	7/16	A
B	1 7/8	2 1/4	2 1/2	3	3 1/2	3 3/4	4 1/8	4 3/8	4 3/4	5 1/8	6 1/8	B
C	1 3/8	1 5/8	1 7/8	2 1/8	2 1/2	2 3/4	3	3 1/4	3 1/2	4 1/8	4 5/8	C
D	1 1/8	1 7/8	1 15/16	2 5/16	2 1/2	2 11/16	2 7/8	3 1/16	3 1/8	3 11/16	4	D
E	2 1/8	2 5/16	2 1/2	3	3 1/8	3 7/16	3 3/8	3 7/8	4 1/16	4 3/8	4 13/16	E
F	2 3/8	3	3 3/8	3 7/8	4 1/2	4 3/4	5	5 1/2	5 3/4	7	7 1/2	F
G	1 1/4	1 1/2	1 3/4	2 1/8	2 3/8	2 3/4	3	3 1/4	3 3/8	4 3/8	4 7/8	G
H	1	1 1/8	1 1/8	1 3/8	1 3/8	1 3/4	1 3/4	2	2 1/2	2 1/2	2 1/2	H
J	1 5/16	1 7/16	1 11/16	1 7/8	2	2 1/4	2 5/16	2 7/16	2 3/8	3	3 5/16	J
K	3 3/4	4 1/4	4 1/2	5 1/4	5 1/2	6	6 1/4	6 1/2	6 3/4	7 1/2	8 1/4	K
L	⅝	⅞	1 1/8	1 1/4	1 5/16	1 1/2	1 3/4	1 7/8	2 1/8	2 1/2	2 3/4	L
M	1	1	1 1/8	1 1/4	1 3/8	1 3/8	1 7/16	1 7/16	1 7/16	1 1/2	1 1/2	M
N	1 3/8	1 3/8	1 1/2	1 1/2	1 5/8	1 5/8	1 3/4	1 7/8	1 7/8	1 7/8	1 7/8	N
O	⅞	⅞	1	1 1/8	1 1/4	1 3/8	1 1/2	1 5/8	1 5/8	2	2	O
P	1 3/16	1 5/16	1 3/8	1 3/4	1 7/8	2 1/16	2 3/16	2 3/8	2 1/2	2 7/8	3 5/16	P
Q	1 3/8	1 3/8	1 3/4	2 1/8	2 1/4	2 7/16	2 5/8	2 7/8	3	3 3/8	3 3/4	Q
R	1 1/16	1 3/16	⅞	1 1/8	1 1/4	1 3/8	1 7/16	1 5/8	1 3/4	2	2 5/16	R
S	⅞	⅞	1 1/8	1 3/8	1 1/2	1 5/8	1 3/4	1 11/16	2 1/16	2 3/8	2 11/16	S
T	¾	¾	1	1 1/8	1 1/4	1 3/8	1 3/8	1 1/2	1 1/2	1 7/8	1 7/8	T
U	1 7/16	1 5/8	1 13/16	2 3/16	2 7/16	2 5/8	2 3/4	2 15/16	3 3/16	3 5/8	3 15/16	U
V	½	½	½	⅝	⅝	⅝	¾	¾	¾	¾	¾	V
W	9/16	9/16	9/16	¾	¾	¾	13/16	13/16	13/16	13/16	13/16	W
X	2 1/8	2 3/8	2 3/4	3 1/4	3 3/8	3 3/4	4	4 1/4	4 3/8	5 1/4	5 3/8	X
Y	2 3/8	2 3/4	2 7/8	3 3/8	3 3/4	4	4 1/4	4 1/2	4 5/8	5 3/8	5 1/2	Y
Z	⅝	⅝	⅝	¾	¾	¾	⅞	⅞	⅞	1	1	Z
a	⅜	7/16	7/16	7/16	½	½	½	9/16	9/16	⅝	⅝	a
b	4 — ½	— ½	— ⅝	— ⅝	— ⅝	— ⅝	— ⅝	— ⅝	— ⅝	— ⅝	— ⅝	b

Digitized by Google

122. Design of Expansion-joints.—Expansion-joints are used with long pipes where it is not convenient to have many bends of large radius. The stuffing-box expansion-joint is shown in Fig. 199.

Donaldson gives the following proportions:

a = diameter of the pipe, in in.;

b = thickness of packing $= \frac{a}{8}$ in.;

c = depth of stuffing-box $= \frac{a}{2}$ inches;

d = bearing part $= \frac{a}{3}$ inches;

e = space for expansion, in in. $= \phi l t +$ clearance;

ϕ = coef. of linear expansion of the pipe for a range of 1° F. = 0.00000625 for cast-iron, 0.00000678 for wrought-iron, 0.000009545 for copper, 0.000010435 for brass;

t = greatest variation in temperature, F.

l = length of the pipe, in in.;

f = space sufficient for entering nuts on flange bolts;

g = depth of gland $= \frac{a}{3}$ inches;

h = space for expansion = e in.;

$i = g$

$k = \frac{a}{6}$ inches.

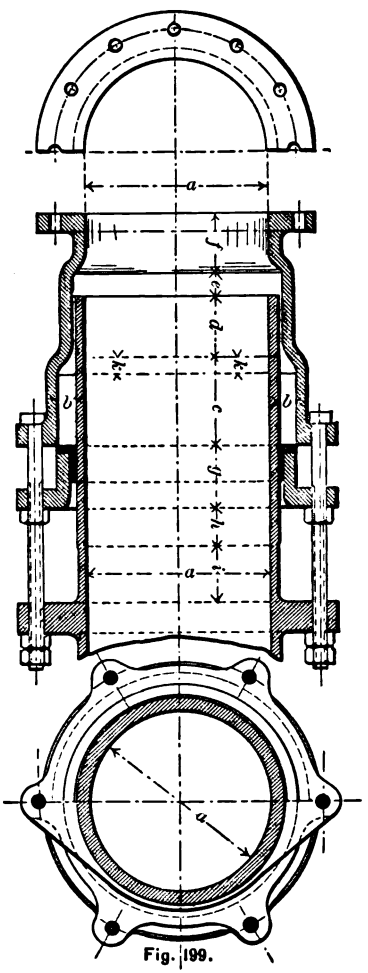

Fig. 199.

The thickness of metal is found by equation (4) of § 118. This applies to the outer casing as well as to the inner. In case cast-iron is used for the expansion-joint, the gland must be lined with brass, as shown in the figure.

Digitized by Google

123. Standard Screw-threads.—The following proportions for bolts, nuts, and screw-threads have been adopted by the U. S. Navy, Franklin Institute, and manufacturers generally in this country. It is known as the Sellers system. The angle of the thread is 60°. One eighth the depth of the thread is taken off from the top and root, so that the actual depth is only $\frac{3}{4}$ of a complete V-thread.

The table of proportions has been deduced from the following formulæ. "The only instance when the values in the table differ from those given in the formulæ is in the number of threads per inch, which is so far modified as to use the nearest convenient aliquot part of a unit, so as to avoid, as far as practicable, troublesome combinations in the gear of screw-cutting machines." *

Let D = nominal diameter of the bolt;
p = pitch of thread;
n = number of threads per inch;
H = depth of nut;
d_n = short diameter of hexagonal or square nut;
d = effective diameter of the bolt = diameter under root of thread;
S = depth of thread;
h = depth of head;
d_h = short diameter of head.

Then

$$p = 0.24\sqrt{D + 0.625} - 0.175;$$

$$n = \frac{1}{p};$$

$$S = 0.65p = \tfrac{3}{4} \times p \sin 60°;$$

$$d = D - 2S = D - 1.3p;$$

$$H = D;$$

$$d_n = \tfrac{3}{2}D + \tfrac{1}{8} \text{ inch} = d_h;$$

$$d_h = \tfrac{3}{2}D + \tfrac{1}{8} \text{ inch} = d_n;$$

$$h = \tfrac{3}{4}D + \tfrac{1}{10} \text{ inch} = \tfrac{1}{2}d_h.$$

* From a Report of a board of U. S. Navy Engineers on *Standard Gauge for Bolts, Nuts, and Screw-threads*, May 1868.

Digitized by Google

The Whitworth and Sellers (or Franklin Institute) forms of screw-thread are illustrated in Fig. 200.

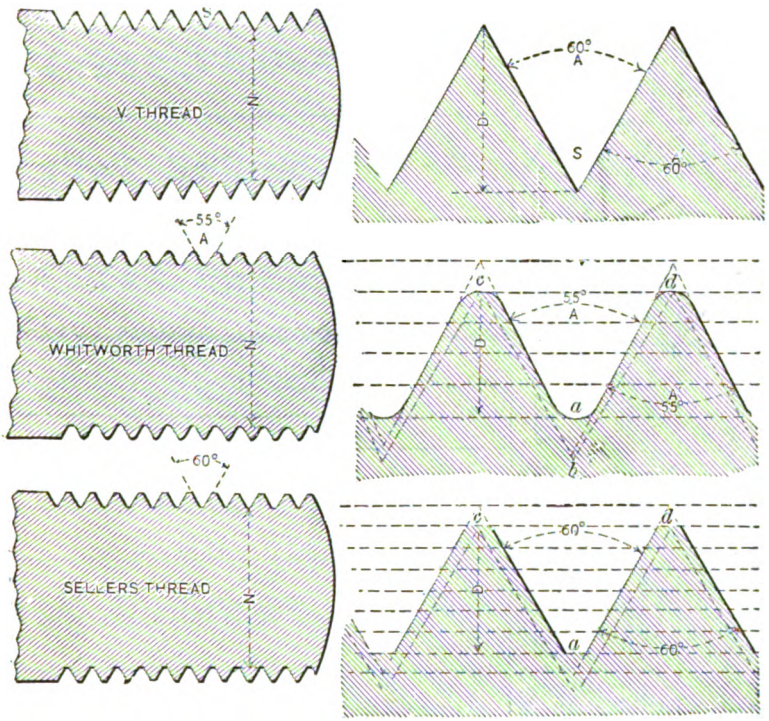

Fig. 200.

The Whitworth Thread is in general use in England. The angle of the thread is 55°. The depth of the thread is 96 per cent of the pitch of the screw. One sixth of the depth is rounded off at both top and bottom, making the actual depth of the thread about 64 per cent of the pitch. The number of threads to the inch in square threads is one half the number for V-threads.

Digitized by Google

PROPORTIONS FOR SELLERS' STANDARD SCREW-THREADS, NUTS AND BOLTS.

Screw-Threads.				Nuts.				Bolt Heads.			
Diameter of screw.	Threads per inch.	Diameter at root of thread.	Width of flat.	Short diameter rough.	Short diameter finish.	Thickness rough.	Thickness finish.	Short diameter rough.	Short diameter finish.	Thickness rough.	Thickness finish.
			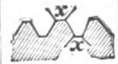	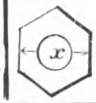		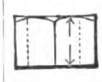	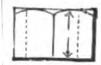	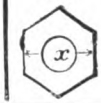		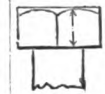	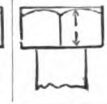
$\frac{1}{4}$	20	.185	.0062	$\frac{1}{2}$	$\frac{7}{16}$	$\frac{1}{4}$	$\frac{3}{16}$	$\frac{1}{2}$	$\frac{7}{16}$	$\frac{1}{4}$	$\frac{3}{16}$
$\frac{5}{16}$	18	.240	.0074	$\frac{19}{32}$	$\frac{17}{32}$	$\frac{5}{16}$	$\frac{1}{4}$	$\frac{19}{32}$	$\frac{17}{32}$	$\frac{19}{64}$	$\frac{1}{4}$
$\frac{3}{8}$	16	.294	.0078	$\frac{11}{16}$	$\frac{5}{8}$	$\frac{3}{8}$	$\frac{5}{16}$	$\frac{11}{16}$	$\frac{5}{8}$	$\frac{11}{32}$	$\frac{5}{16}$
$\frac{7}{16}$	14	.344	.0089	$\frac{25}{32}$	$\frac{23}{32}$	$\frac{7}{16}$	$\frac{3}{8}$	$\frac{25}{32}$	$\frac{23}{32}$	$\frac{25}{64}$	$\frac{3}{8}$
$\frac{1}{2}$	13	.400	.0096	$\frac{7}{8}$	$\frac{13}{16}$	$\frac{1}{2}$	$\frac{7}{16}$	$\frac{7}{8}$	$\frac{13}{16}$	$\frac{7}{16}$	$\frac{7}{16}$
$\frac{9}{16}$	12	.454	.0104	$\frac{31}{32}$	$\frac{29}{32}$	$\frac{9}{16}$	$\frac{1}{2}$	$\frac{31}{32}$	$\frac{29}{32}$	$\frac{31}{64}$	$\frac{1}{2}$
$\frac{5}{8}$	11	.507	.0113	$1\frac{1}{16}$	1	$\frac{5}{8}$	$\frac{9}{16}$	$1\frac{1}{16}$	1	$\frac{17}{32}$	$\frac{9}{16}$
$\frac{3}{4}$	10	.620	.0125	$1\frac{1}{4}$	$1\frac{3}{16}$	$\frac{3}{4}$	$\frac{11}{16}$	$1\frac{1}{4}$	$1\frac{3}{16}$	$\frac{3}{8}$	$\frac{11}{16}$
$\frac{7}{8}$	9	.731	.0138	$1\frac{7}{16}$	$1\frac{3}{8}$	$\frac{7}{8}$	$\frac{13}{16}$	$1\frac{7}{16}$	$1\frac{3}{8}$	$\frac{23}{32}$	$\frac{13}{16}$
1	8	.837	.0156	$1\frac{5}{8}$	$1\frac{9}{16}$	1	$\frac{15}{16}$	$1\frac{5}{8}$	$1\frac{9}{16}$	$\frac{13}{16}$	$\frac{15}{16}$
$1\frac{1}{8}$	7	.940	.0178	$1\frac{13}{16}$	$1\frac{3}{4}$	$1\frac{1}{8}$	$1\frac{1}{16}$	$1\frac{13}{16}$	$1\frac{3}{4}$	$\frac{29}{32}$	$1\frac{1}{16}$
$1\frac{1}{4}$	7	1.065	.0178	2	$1\frac{15}{16}$	$1\frac{1}{4}$	$1\frac{3}{16}$	2	$1\frac{15}{16}$	1	$1\frac{3}{16}$
$1\frac{3}{8}$	6	1.160	.0208	$2\frac{3}{16}$	$2\frac{1}{8}$	$1\frac{3}{8}$	$1\frac{5}{16}$	$2\frac{3}{16}$	$2\frac{1}{8}$	$1\frac{3}{32}$	$1\frac{5}{16}$
$1\frac{1}{2}$	6	1.284	.0208	$2\frac{3}{8}$	$2\frac{5}{16}$	$1\frac{1}{2}$	$1\frac{7}{16}$	$2\frac{3}{8}$	$2\frac{5}{16}$	$1\frac{3}{16}$	$1\frac{7}{16}$
$1\frac{5}{8}$	$5\frac{1}{2}$	1.389	.0227	$2\frac{9}{16}$	$2\frac{1}{2}$	$1\frac{5}{8}$	$1\frac{9}{16}$	$2\frac{9}{16}$	$2\frac{1}{2}$	$1\frac{9}{32}$	$1\frac{9}{16}$
$1\frac{3}{4}$	5	1.491	.0250	$2\frac{3}{4}$	$2\frac{11}{16}$	$1\frac{3}{4}$	$1\frac{11}{16}$	$2\frac{3}{4}$	$2\frac{11}{16}$	$1\frac{3}{8}$	$1\frac{11}{16}$
$1\frac{7}{8}$	5	1.616	.0250	$2\frac{15}{16}$	$2\frac{7}{8}$	$1\frac{7}{8}$	$1\frac{13}{16}$	$2\frac{15}{16}$	$2\frac{7}{8}$	$1\frac{15}{32}$	$1\frac{13}{16}$
2	$4\frac{1}{2}$	1.712	.0277	$3\frac{1}{8}$	$3\frac{1}{16}$	2	$1\frac{15}{16}$	$3\frac{1}{8}$	$3\frac{1}{16}$	$1\frac{9}{16}$	$1\frac{15}{16}$

Digitized by Google

$2\frac{1}{1}$	$4\frac{1}{2}$	1.962	.0277	$3\frac{1}{2}$	$3\frac{7}{16}$	$2\frac{1}{2}$	$2\frac{5}{16}$	$3\frac{1}{2}$	$3\frac{7}{16}$	$1\frac{1}{4}$	$2\frac{5}{16}$
$2\frac{1}{2}$	4	2.176	.0312	$3\frac{7}{8}$	$3\frac{13}{16}$	$2\frac{1}{2}$	$2\frac{7}{16}$	$3\frac{7}{8}$	$3\frac{13}{16}$	$1\frac{1}{16}$	$2\frac{7}{16}$
$2\frac{3}{4}$	4	2.426	.0312	$4\frac{1}{4}$	$4\frac{5}{16}$	$2\frac{3}{4}$	$2\frac{11}{16}$	$4\frac{1}{4}$	$4\frac{5}{16}$	$2\frac{1}{8}$	$2\frac{11}{16}$
3	$3\frac{1}{2}$	2.629	.0357	$4\frac{3}{8}$	$4\frac{9}{16}$	3	$2\frac{15}{16}$	$4\frac{3}{8}$	$4\frac{9}{16}$	$2\frac{5}{16}$	$2\frac{15}{16}$
$3\frac{1}{4}$	$3\frac{1}{2}$	2.879	.0357	5	$4\frac{15}{16}$	$3\frac{1}{4}$	$3\frac{3}{16}$	5	$4\frac{15}{16}$	$2\frac{1}{2}$	$3\frac{3}{16}$
$3\frac{1}{2}$	$3\frac{1}{2}$	3.100	.0384	$5\frac{3}{8}$	$5\frac{5}{16}$	$3\frac{1}{2}$	$3\frac{7}{16}$	$5\frac{3}{8}$	$5\frac{5}{16}$	$2\frac{11}{16}$	$3\frac{7}{16}$
$3\frac{3}{4}$	3	3.317	.0413	$5\frac{3}{4}$	$5\frac{11}{16}$	$3\frac{3}{4}$	$3\frac{11}{16}$	$5\frac{3}{4}$	$5\frac{11}{16}$	$2\frac{7}{8}$	$3\frac{11}{16}$
4	3	3.567	.0413	$6\frac{1}{8}$	$6\frac{1}{16}$	4	$3\frac{15}{16}$	$6\frac{1}{8}$	$6\frac{1}{16}$	$3\frac{1}{16}$	$3\frac{15}{16}$
$4\frac{1}{4}$	$2\frac{7}{8}$	3.798	.0435	$6\frac{1}{2}$	$6\frac{7}{16}$	$4\frac{1}{4}$	$4\frac{3}{16}$	$6\frac{1}{2}$	$6\frac{7}{16}$	$3\frac{1}{4}$	$4\frac{3}{16}$
$4\frac{1}{2}$	$2\frac{3}{4}$	4.028	.0454	$6\frac{7}{8}$	$6\frac{13}{16}$	$4\frac{1}{2}$	$4\frac{7}{16}$	$6\frac{7}{8}$	$6\frac{13}{16}$	$3\frac{7}{16}$	$4\frac{7}{16}$
$4\frac{3}{4}$	$2\frac{5}{8}$	4.256	.0476	$7\frac{1}{4}$	$7\frac{3}{16}$	$4\frac{3}{4}$	$4\frac{11}{16}$	$7\frac{1}{4}$	$7\frac{3}{16}$	$3\frac{5}{8}$	$4\frac{11}{16}$
5	$2\frac{1}{2}$	4.480	.0500	$7\frac{5}{8}$	$7\frac{9}{16}$	5	$4\frac{15}{16}$	$7\frac{5}{8}$	$7\frac{9}{16}$	$3\frac{13}{16}$	$4\frac{15}{16}$
$5\frac{1}{4}$	$2\frac{1}{2}$	4.730	.0500	8	$7\frac{15}{16}$	$5\frac{1}{4}$	$5\frac{3}{16}$	8	$7\frac{15}{16}$	4	$5\frac{3}{16}$
$5\frac{1}{2}$	$2\frac{3}{8}$	4.953	.0526	$8\frac{3}{8}$	$8\frac{5}{16}$	$5\frac{1}{2}$	$5\frac{7}{16}$	$8\frac{3}{8}$	$8\frac{5}{16}$	$4\frac{3}{16}$	$5\frac{7}{16}$
$5\frac{3}{4}$	$2\frac{3}{8}$	5.203	.0526	$8\frac{3}{4}$	$8\frac{11}{16}$	$5\frac{3}{4}$	$5\frac{11}{16}$	$8\frac{3}{4}$	$8\frac{11}{16}$	$4\frac{3}{8}$	$5\frac{11}{16}$
6	$2\frac{1}{2}$	5.423	.0555	$9\frac{1}{8}$	$9\frac{1}{16}$	6	$5\frac{15}{16}$	$9\frac{1}{8}$	$9\frac{1}{16}$	$4\frac{9}{16}$	$5\frac{15}{16}$

PROPORTIONS FOR SELLERS' STANDARD NUTS AND BOLTS.

Rough Nut = one and one-half diameter of bolt + $\frac{1}{8}$.

Finished Nut = one and one-half diameter of bolt + $\frac{1}{16}$.

Rough Nut = diameter of bolt.

Finished Nut = diameter of bolt − $\frac{1}{16}$.

Rough Head = one and one-half diameter of bolt + $\frac{1}{8}$.

Finished Head = one and one-half diameter of bolt + $\frac{1}{16}$.

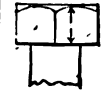

Rough Head = one-half distance between parallel sides of head.

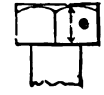

Finished Head = diameter of bolt − $\frac{1}{16}$.

Digitized by Google

WHITWORTH'S STANDARD V SCREW-THREADS.

Diameter of screw.	Number of threads to the inch.	Diameter of screw.	Number of threads to the inch.	Diameter of screw.	Number of threads to the inch.
1/4	20	1 5/8	6	3 1/2	3 1/2
5/16	18	1 3/4	6	3 3/4	3
3/8	16	1 7/8	5	4	3
7/16	14	2	5	4 1/4	2 7/8
1/2	12	2 1/8	4 1/2	4 1/2	2 7/8
9/16	11	2 1/4	4 1/2	4 3/4	2 3/4
5/8	10	2 3/8	4	5	2 3/4
3/4	9	2 1/2	4	5 1/4	2 5/8
1	8	2 3/4	3 1/2	5 1/2	2 5/8
1 1/8	7	3	3 1/2	5 3/4	2 1/2
1 1/4	7	3 1/4	3 1/4	6	2 1/2

Forms of *pipe couplings* are shown in Fig. 201. *A* represents an ordinary union.

The number of threads to the inch for such unions is given in the following table, which represents Briggs's system. It is in general use in the United States. The table given on p. 335 is here reproduced and extended.

STANDARD DIMENSIONS OF WROUGHT-IRON WELDED TUBES.

Diameter of tube.			Thickness of metal.	Screwed ends.	
Nominal inside.	Actual inside.	Actual outside.		Number of threads per in.	Length of perfect screw.
Inches.	Inches.	Inches.	Inches.	No.	Inches.
1/8	0.270	0.405	0.068	27	0.19
1/4	0.364	0.540	0.088	18	0.29
3/8	0.494	0.675	0.091	18	0.30
1/2	0.623	0.840	0.109	14	0.39
3/4	0.824	1.050	0.113	14	0.40
1	1.048	1.315	0.134	11 1/2	0.51
1 1/4	1.380	1.660	0.140	11 1/2	0.54
1 1/2	1.610	1.900	0.145	11 1/2	0.55
2	2.067	2.375	0.154	11 1/2	0.58
2 1/2	2.468	2.875	0.204	8	0.89
3	3.067	3.500	0.217	8	0.95
3 1/2	3.548	4.000	0.226	8	1.00
4	4.026	4.500	0.237	8	1.05
4 1/2	4.508	5.000	0.246	8	1.10
5	5.045	5.563	0.259	8	1.16
6	6.065	6.625	0.280	8	1.26
7	7.023	7.625	0.391	8	1.36
8	8.982	8.625	0.322	8	1.46
9	9.000	9.688	0.344	8	1.57
10	10.019	10.750	0.336	8	1.68

Digitized by Google

B, of Fig. 201, represents the coupling between a casting and pipe, while C shows a form of coupling suited to copper or lead pipes.

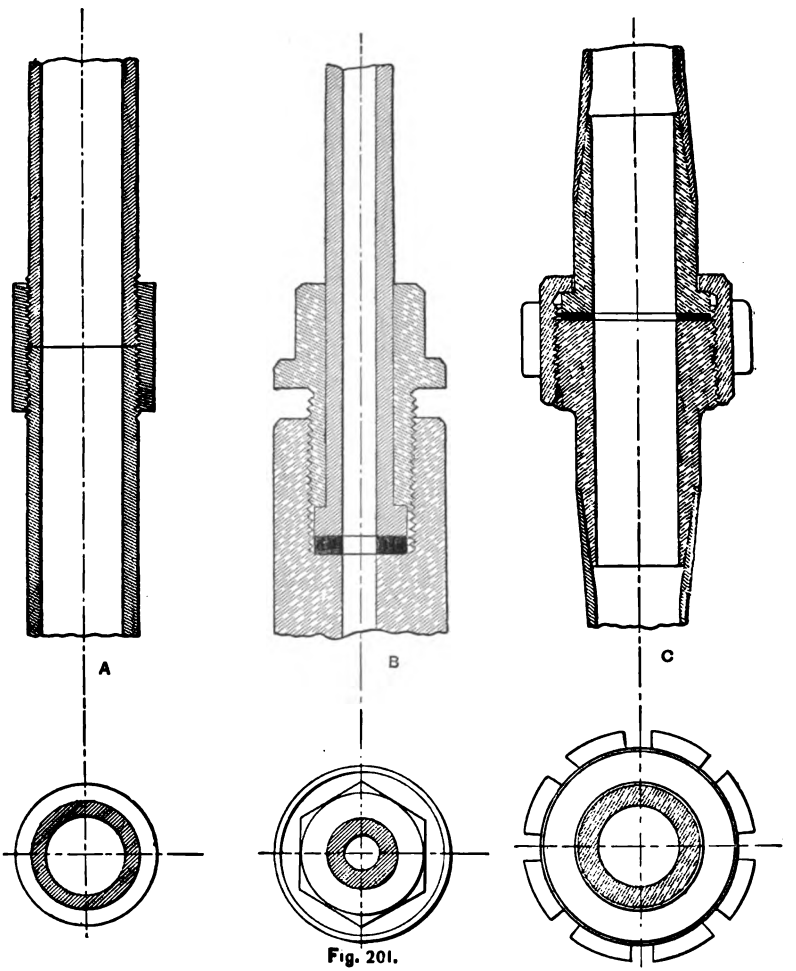

Fig. 201.

124. Walking-beams.—Walking-beams are used for paddle-wheel engines, and occasionally for stationary engines. Two forms are here given.

Digitized by Google

Figure 202 is cast-iron, the beam being a single casting. Sometimes, however, the beam is made of two similar castings fastened together by the gudgeons.

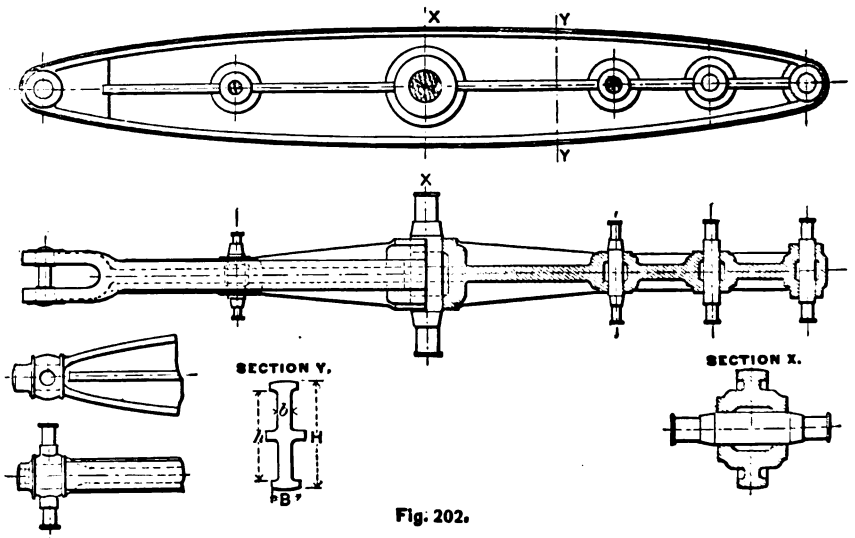

Fig. 202.

Fig. 203 is a cast-iron beam bound with wrought-iron, to which it is keyed.

A walking-beam is in the condition of a beam fixed at one end, the pivot, and loaded at the free end. The load at the connecting-rod end is equal to the total maximum unbalanced load on the piston $= P$ pounds.

Let L = length of walking-beam in inches from centre to end;

x = any part of L measured from end of beam;

I = moment of inertia of cross-section;

f = *safe* transverse resistance of the material used, in pounds per sq. in. = 3000 for cast-iron and 6000 for wrought-iron, using a factor of safety of 6.

Digitized by Google

Then, as in § 90,

$$xP = \frac{2fI}{h}, \quad . \quad . \quad . \quad . \quad . \quad . \quad . \quad . \quad . \quad (1)$$

where h = the depth of the section.

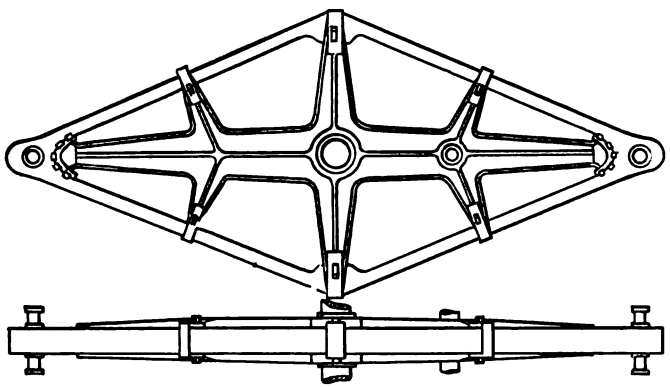

Fig. 203.

For an I-section, as shown in Fig. 202, the moment of inertia, I, is taken as $\frac{(\text{width of flange})^2 \times \text{area of section}}{21}$. For a cruciform section, as in Fig. 202, $I = \frac{(\text{greatest width})^2 \times \text{area}}{22.5}$.

The beam may be designed for resistance to shearing. The shear at any section YY, Fig. 202, is equal to P increased by the weight of the beam between P and the section. This will require that the shearing resistance of cast-iron be considered. It has a safe value of 4000 lbs. per sq. in. of cross-section. The shearing strength is to be found in the web.

When the beam is designed for rigidity, a maximum deflection of, say, $\frac{1}{200}$ in. per ft. of length may be allowed, and the proportions determined accordingly. In general, rigidity is secured by making the web sufficiently deep, and ribbing it.

When the walking-beam is made a truss, as in Fig. 203, it may either be designed as is a central pivot drawbridge, or as

Digitized by Google

a simple cantilever. In either case the stresses in the top and bottom chords and web-members are to be found. For the design of this particular form of truss the reader is referred to any one of the numerous text-books on Bridge Engineering.

Digitized by Google

CHAPTER XV.

PROPELLING INSTRUMENTS AND THE POWERING OF VESSELS.

125. Theory of the Propeller.—The fundamental principle of the action of every form of propeller is that the vessel is moved ahead by the forward reaction of a current of water driven backward by the propelling instrument. The propeller imparts a certain velocity to a certain mass of water, and the reaction is proportional to these two elements. The reacting force, being equal to the acting force, is transmitted to the framework of the machinery and thence to the vessel. When the ship is starting from rest, or increasing her speed, the driving force is greater than the resistance of the vessel at the lower velocity. So long as the velocity of the ship is constant the driving force and resistance are equal.

The oar and feathering paddle-wheel act directly backward on the water, while the radial paddle-wheel and screw act obliquely at various angles.

The work done by the engine may be divided into two parts:

1. The useful work, or that part of the power which is utilized in moving the vessel.
2. The wasteful work which is done in overcoming the loaded friction of the engine, and imparting motion to the water.

Let V = speed of the propeller in feet per second, or the speed of the current of water with regard to the ship;

v = speed of the ship in feet per second;

s = speed of the current of water moved by the propeller, with regard to still water, in feet per second.

Digitized by Google

Then

$$s = \text{slip of the stream} = V - v.$$

The percentage of slip is evidently

$$\frac{100s}{V} = \frac{100(V - v)}{V} \quad \ldots\ldots\ldots \quad (1)$$

As stated, the propelling effect depends upon the mass of water moved and its velocity, i.e., upon the *momentum* of the stream sent backward by the propeller. The mass of water moved depends upon two factors: 1, the density of the water; and 2, the sectional area of the stream.

Let A = sectional area of the stream in square feet;
W = weight of a cubic foot of the water moved;
N = number of cubic feet of water moved per second;
g = acceleration due to gravity.

Then

$$\text{Momentum of the stream} = \frac{W}{g} Ns = \frac{W}{g} N(V - v). \quad (2)$$

The ratio $\frac{W}{g}$ is $\left(\frac{64.4}{32.2} =\right) 2$ for sea-water, and $\left(\frac{62.5}{32.2} =\right) 1.941$ for fresh water. N being equal to AV, equation (2) becomes

$$\text{Momentum of the stream} = 2AV(V - v). \quad \ldots \quad (3)$$

This measures the total resistance of the ship in pounds, and the propelling force, when the ship's speed is constant. Inspecting (3), we see that the propelling force depends upon A and V, so that if one is increased the other may be decreased proportionately, s being constant. The value of A is taken equal to the disk of the screw minus the area of the hub, for a screw-propeller; the area of two paddles, for a feathering paddle-wheel; and the breadth multiplied by the depth of immersion, for a radial paddle-wheel.

Digitized by Google

Ship and water resistances are:

1. Frictional, depending upon—
   (*a*) The wetted surface and its roughness;
   (*b*) Speed and shape of vessel.
2. Wave-making, depending upon the relative proportions of entrance, middle-body, and run.
3. Eddy-making, depending upon—
   (*a*) The shape of stern;
   (*b*) Method of propulsion.

Since it is not the province of a book on designing the machinery for a ship to treat of naval architecture, only methods used in practice which enable the engineer to proportion his machinery to his vessel, and determine the size and shape of the propelling instrument, will be here given.

126. The Indicated Horse-power necessary to drive a certain vessel at a certain speed against a certain resistance may be computed by many different methods. Of these methods, *Kirk's analysis* perhaps affords a more speedy solution of the problem than any other, and with sufficient accuracy. Besides, the result found by its use will vary but little from those obtained by more exact methods, and will be a little too large rather than too small.

Kirk's analysis consists in making a scale-drawing whose length is equal to the length of the vessel between perpendiculars, whose depth is equal to the mean draught of water, whose breadth of middle-body is equal to the immersed midship section, divided by the mean draught, whose ends are equal prisms of such length that the displacement of the model and actual vessel will be the same. Having obtained a form of this kind, it is evident that the value of the mean half-breadth, the lengths of the entrance, run, and middle-body, the angles of entrance and run, and the wetted surface can be easily determined.*

We will illustrate this method by applying it to the U.S.S. *Galena*, having the following data:

* See *Engineering*, xxxiii. 297.

Digitized by Google

Length between perpendiculars, ...	216 ft.
Loaded mean draught, ...	16 "
Greatest breadth at load-water line, ...	37 "
Area of "dead flat" or immersed midship section, .	448 sq. ft.
Displacement in long tons, ...	1900
Displacement in cu. ft. of sea-water (1900 × 35 =)	66500
Designed speed in knots per hour, ...	12.5

Indicated Horse-power by Kirk's Analysis, Fig. 204.

The mean breadth is $\left(\frac{448}{16} =\right)$, ...	28 ft.
The length of entrance + middle.body is $\left(\frac{66500}{448} =\right)$	148.44 ft.
The length of each prismatic end is (216 − 148.44 =)	67.56 "
The length of the middle-body is (148.44 − 67.56 =)	80.88 "

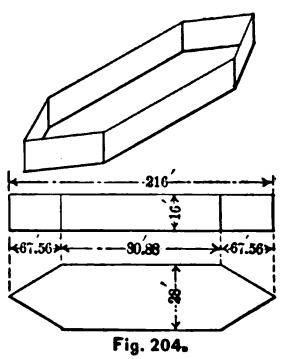

Fig. 204.

We may now lay down the breadth and sheer plans as in Fig. 204.

Area of bottom is [(80.88 + 67.56) × 28 =] .	4156.2 sq. ft.
Area of sides is [(4 × 69 + 2 × 80.88) × 16 =]	7004.2 "
Area of wetted surface by Kirk's analysis, sq. ft. =	11160.4

From experiments made by the late Dr. Froude and others it appears that *the indicated horse-power may be found by assuming that the resistance of one square foot of wetted-surface*

Digitized by Google

at a speed of ten knots per hour is 0.05 *pound, and that the resistance varies directly as the cube of the speed.*

Hence the indicated horse-power of the *Galena* should be, for a speed of 12.5 knots per hour,

$$\left(\frac{12.5}{10}\right)^3 \times 0.05 \times 11160.4 = 1090.*$$

The formula for indicated horse-power, by Kirk's analysis, is

$$\text{I. H. P.} = \left(\frac{N}{10}\right)^3 \times 0.05S = 0.00005SN^3, \quad . \quad . \quad (1)$$

where N = greatest desired speed of ship in knots per hour;
S = wetted surface in square feet.

Rankine's Formula for the Indicated Horse-power necessary to propel a vessel at a certain velocity has long been used by naval architects and marine engineers in designing. It is presented in the *Pro. of Inst. of Naval Arch.* of England, and in pp. 125 to 127 of Wilson's *Ship-Building*, and p. 447, vol. vii., of *Pro. U. S. Naval Inst.* The formula for an iron ship is

$$\text{I. H. P.} = \frac{N^3 A_s}{20000}, \quad . \quad . \quad . \quad . \quad . \quad . \quad . \quad (2)$$

where N = speed of the vessel in knots per hour;
A_s = augmented surface of the ship = the wetted surface multiplied by the coefficient of augmentation.

Let α = the greatest angle made by a trochoidal ribband and its straight chord, or (since the lines of the ship are approximately trochoidal curves) the *mean* angle made by all of the water-lines and the centre-line of the ship at the bow.

Then

$$1 + 4\sin^3\alpha + \sin^4\alpha = \text{the coefficient of augmentation.}$$

* The U.S.S. *Quinnebaug*, a sister ship, developed 1103 I. H. P., and a speed of 12.6 knots, in smooth water, with a gentle breeze abeam, on the Chesapeake Bay, Dec. 6, 1878, from 2 to 3 P.M.

Digitized by Google

The method of procedure in using equation (2) is to compute the value of $4 \sin^2 \alpha$ and $\sin^4 \alpha$ for each water-line, and, taking their mean value, find the coefficient of augmentation. Then, in the body plan, measure the immersed girth of a series of cross-sections and take their mean value. This mean immersed girth multiplied by the length of the ship between perpendiculars is the wetted surface. Multiply the wetted surface by the coefficient of augmentation, and the product is the augmented surface, A_1.

In the deduction of equation (2) the friction of one square foot of wetted surface is taken as 0.0036 lb. for wrought-iron (Weisbach), and the I. H. P. developed in the cylinders is assumed to be 1.63 of the power actually used in propulsion.

EXAMPLE.—An iron ship 250 ft. long, having a mean immersed girth of 50 ft., is to be propelled at a speed of 15 knots per hour. The measured angles for the several water-lines are as below. Find the I. H. P.

Water-lines.	Angle α.	Sin α.	$\sin^2 \alpha$.	$\sin^4 \alpha$.
Load,	23° 16′	0.4	0.16	0.0256
2d,	17° 28	0.3	0.09	0.0081
3d,	11 33	0.2	0.04	0.0016
4th,	5 45	0.1	0.01	0.0001
Keel,	0 0	0.0	0.00	0.0000
Sum,			0.30	0.0354
Mean value,			0.06	0.0071

$$\text{Coefficient of augmentation} = 1 + 4 \sin^2 \alpha + \sin^4 \alpha$$
$$= 1 + 4 \times 0.06 + 0.0071 = 1.2471.$$

$$\text{Wetted surface} = 250 \times 50 = 12500 \text{ sq. ft.}$$
$$\text{Augmented surface} = 12500 \times 1.2471.$$

$$\text{I. H. P.} = \frac{(15)^3 \times 12500 \times 1.2471}{20000} = 2630.$$

127. Radial Paddle-wheel.—As in § 125, let

V = linear velocity of the centre of pressure of the paddle-float in feet per second;

v = speed of the ship in feet per second;

Digitized by Google

s = speed of the stream of water moved by the floats, in feet per second, relatively to still water;

A = area of two floats (two being supposed immersed at the same instant, one on each side of the vessel) in square feet;

D = effective diameter of the wheel in feet;

A_s = augmented surface of the ship (see § 126);

N = speed of the ship in knots per hour $= \frac{60 \times 60 \times v}{6080}$;

f = friction of one square foot of the wetted surface of the vessel in pounds = 0.0036 for iron (Weisbach);

W = weight of a cubic foot of water = 64.4 lbs. for sea and 62.5 for fresh water.

Then

$$fWA_s\frac{v^2}{2g}$$

is the resistance of the ship, which is also equal to

$$\frac{AWVs}{g} = \frac{AWV(V-v)}{g} \text{ (from § 125).}$$

Hence

$$fWA_s\frac{v^2}{2g} = \frac{AWV(V-v)}{g},$$

or

$$\textit{Area of one float} = \frac{A}{2} = \frac{fA_sv^2}{4V(V-v)} = \frac{A_sv^2}{1110V(V-v)} \text{ sq. ft.} \quad (1)$$

Seaton gives

$$\text{Area of one float, square feet,} = \frac{\text{(I. H. P.)}}{D} \times C \quad . \quad . \quad (2)$$

where C = 0.25 for tugs and 0.175 for fast-running light steamers.

The slip, $V - v = s$, is from 15 to 30 per cent of V, the velocity of the paddle. The slip varies inversely as the area of the float. The *centre of pressure* will vary with the depth

Digitized by Google

of immersion and the form of the float. It is usually taken at the centre of the float. The (*length* ÷ *breadth*) of a float = 4 in general practice. The *number of floats* is about equal to the diameter of the wheel in feet.

The floats are beams supported at the ends and loaded with a uniform load whose amount is, from § 125, equation (3), $AV(V - v)$ pounds. The *thickness* may be computed for strength, but it is usual to make it 0.125 of the breadth. This will give sufficient rigidity and strength for a float made of any tough, strong wood, such as oak or elm. The floats are secured to radial wrought-iron arms which are bolted to the cast-iron or wrought-iron hub. There are two or more arms for each float. The arms are cross-stayed, and bound by one or two wrought-iron rims.

128. Design of a Feathering Paddle-wheel.

CASE I. *Action of the Feathering Paddle.*—The following description is taken from § 247 of Rankine's *Machinery and Mill-work;* (Consult Fig. 205.)

"Each of the paddles is supported by a pair of journals, so as to be capable of turning about a moving axis parallel to the axis of the paddle-wheel, while the position relatively to that moving axis is regulated by means of a lever and rod, connecting it with another fixed axis. Thus, in Fig. 205, *A* is the axis of the paddle-wheel; *K* the other fixed axis, or eccentric axis; *B*, *E*, *N*, *C*, *P*, *M*, *D*, the axis of a paddle at various points of its revolution round the axis *A* of the wheel; *BF*, *EH*, *NQ*, *CR*, *PS*, *ML*, *DG*, the *stem-lever* of the paddle in various positions; *KF*, *KH*, *KQ*, *KR*, *KS*, *KL*, *KG*, various positions of the guide-rod which connects the stem-lever with the eccentric axis."

"When the end of the paddle-shaft *overhangs*, and has no outside bearing, the eccentric axis may be occupied by a pin fixed to the paddle-box framing; but if the paddle-shaft has an outside as well as an inside bearing, the inner edges of the guide-rods are attached to an *eccentric collar*, large enough to contain the paddle-shaft and its bearing within it, and represent the small dotted circle that is described about *K*. One of the rods,

Digitized by Google

called the *driving-rod*, is rigidly fixed to the collar, in order to make it rotate about the axis of K; the remainder of the rods are jointed to the collar with pins.

"The object of the combination is to make the paddles, so long as they are immersed, move as nearly as possible edgewise relatively to the water in the paddle-race. The paddle-race is assumed to be a uniform current moving horizontally,

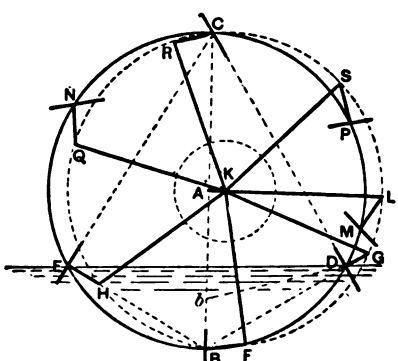

Fig. 205.

relatively to the axis A, with a velocity equal to that with which the axes B, etc., of the paddle-journals revolve round A. Let E be the position of a paddle-journal axis at any given instant; conceive the velocity of the point E in its revolution round A to be resolved into two components—a normal component perpendicular, and a tangential component parallel, to the face of the paddle. Conceive the velocity of the particles of water in the paddle-race to be resolved in the same way. Then, in order that the paddle may move as nearly as possible edgewise relatively to the water, the normal components of the velocities of the journal E and the particles of water should be identical.

"Let B be the lowest point of the circle described by the paddle-journal axes; that is, let AB be vertical. Draw the chord EB. Then it is evident that the component velocities of the points B and E along EB are identical. But the velocity of B is identical in amount and direction with that of the water in the paddle-race. Therefore the face of a paddle at E

Digitized by Google

should be normal to the chord *EB*, or as nearly so as possible. Another way of stating the same principle is to say that a tangent, *EC*, to the face of the paddle should pass through the *highest point*, *C*, of the circle described by the paddle-journal axes, *CAB* being the vertical diameter of that circle.

"It is impossible to fulfil this condition exactly by means of the combination shown in the figure; but it is fulfilled with an approximation sufficient for practical purposes, so long as the paddles are in the water, by means of the following construction: Let *D* and *E* be the two points where the circle described by the paddle-journals cuts the surface of the water. From the uppermost point, *C*, of that circle draw the straight lines *CE*, *CD*, to represent tangents to the face of a paddle at the instant when its journals are entering and leaving the water. Draw also the vertical diameter *CAB* to represent a tangent to the face of a paddle at the instant when it is most deeply immersed. Then draw a stem-lever projecting from the paddle in its three positions, *DG*, *BF*, *EH*. In the figure, that lever is drawn at right angles to the face of the paddle; but the angle at which it is placed is to a certain extent arbitrary, though it seldom deviates much from a right angle. The length of the stem-lever is a matter of convenience; it is usually about $\frac{3}{5}$ of the depth of a face of a paddle. Then, by plane geometry, find the centre, *K*, of the circle traversing the three points, *G*, *F*, and *H*; *K* will mark the proper position for the eccentric axis; and a circle described about *K*, with a radius *KF*, will traverse all the positions of the joints of the stem-levers.

"From the time of entering to the time of leaving the water paddles fitted with this feathering gear move almost exactly as required by the theory; but their motion when above the surface of the water is very different, as the figure indicates.

"To find whether, and to what extent, it may be necessary to notch the edges of the paddles in order to prevent them from touching the guide-rods, produce *AK* till it cuts the circle *GFH* in *L*; from the point *L* lay off the length, *LM*, of the stem-lever to the circle *BDE*, and draw a transverse section

Digitized by Google

of a paddle with the axis of its journals at M, its stem-lever in the position ML, and its guide-rod in the position LK. This will show the position of the parts when the guide-rod approaches most closely to the paddle.

"Some engineers prefer to treat the paddle-race as undergoing a gradual acceleration from the point where the paddle enters the water to the point of deepest immersion. The following is the consequent modification in the process of designing the gear: Let the final velocity of the paddle-race be, as before, equal to that of the point B in the wheel, and let the initial velocity be equal to that of the point b, at the end of a shorter vertical radius, Ab. Let D be the axis of a paddle-journal in the act of entering the water, and E the same axis in the act of leaving the water. Join bD and BE, draw the face of the paddle at D normal to Db, the face of the paddle at B vertical, as before, and the face of the paddle at E normal to EB. Then draw the stem-lever in its three positions, making a convenient constant angle with the paddle-face; and find the centre of a circle traversing the three positions of the end of the stem-lever; that centre will, as before, mark the proper position for the eccentric axis." *

CASE II. *Floats.—The area of one float* in square feet may be found by using formulæ (1) and (2) of § 127, by giving the quantity $V - v = s$, in (1), a value of from 12 to 20 per cent of V, and the constant C, in (2), a value of from 0.3 to 0.35. Seaton gives the following rules:

$$\text{Number of floats or paddles} = \frac{D + 2}{2};$$

Breadth of a float $= 0.35 \times$ its length;

Thickness of a float $= \frac{1}{12} \times$ its breadth.

CASE III. *Diameter of a Feathering Paddle-wheel.*—From § 127, $V = \pi D \times$ number of revolutions per second. The centre of pressure is, on account of the varying depth of im-

* Fig. 206 is from Donaldson's *Drawing and Rough Sketching for Marine Engineers.*

Digitized by Google

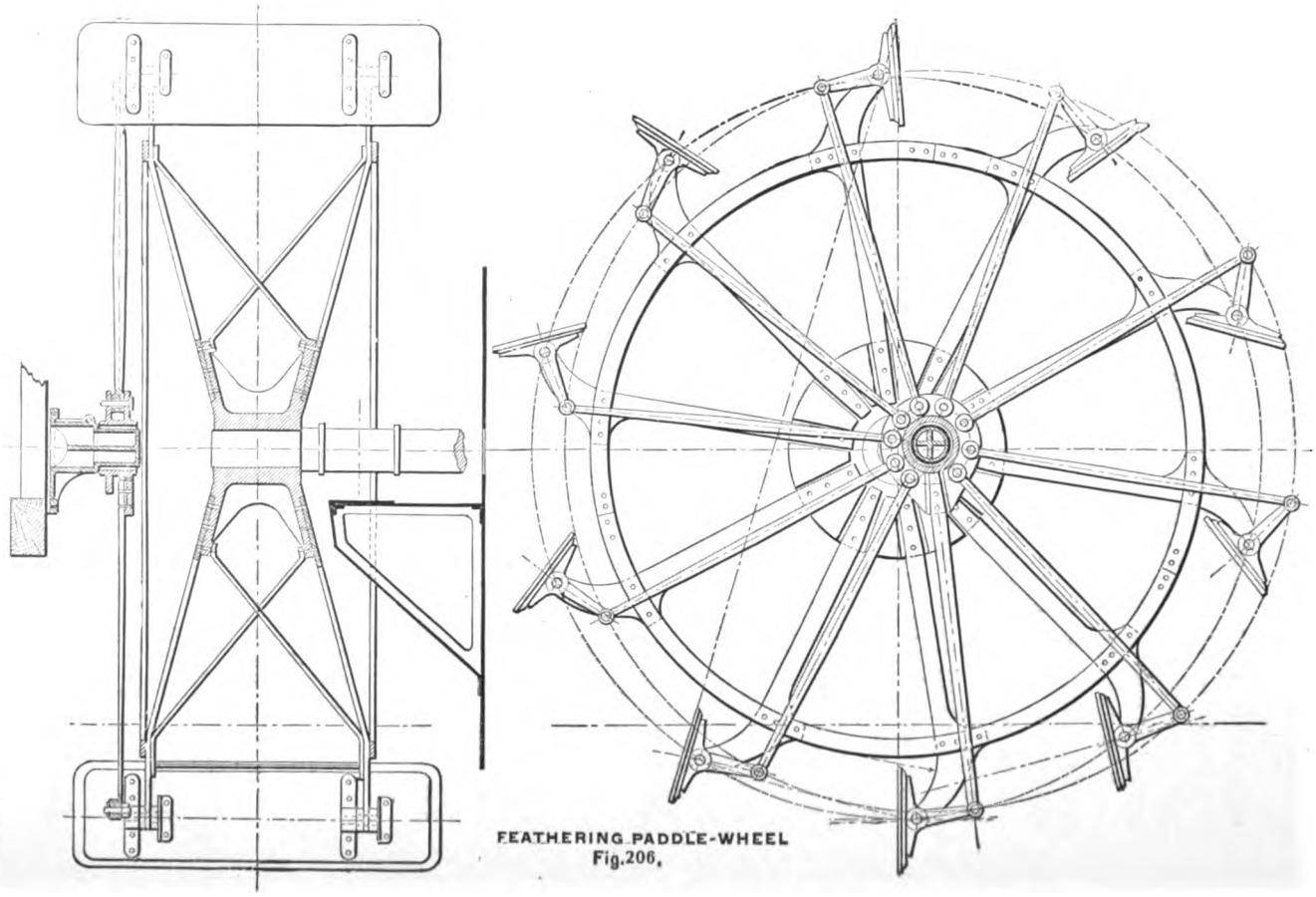

FEATHERING PADDLE-WHEEL
Fig.206.

Digitized by Google

mersion and the disturbing influence of eddies, usually assumed to be at the centre of the float. Hence D is the distance BC in Fig. 205. From § 125, $V = s + v$, so that

$$D = \frac{v + s}{\pi \times \text{number of revolutions per second}}.$$

As in § 126, let

N = velocity of the ship in knots per hour;
s = percentage of slip;
R = number of revolutions of the paddle per minute.

Then

$$D = \text{diameter of wheel at centres of pressure} = \frac{N(100 \times s)}{3.1R}. \quad (1)$$

From this it is seen that D varies inversely as R. In case the vessel requires a large or small value for D, R must be changed accordingly.

The depth of immersion must not be great, for if so the efficiency of the wheel is decreased. For a laden cargo steamer it is well to have the greatest immersion of a float about equal to its breadth, so that when carrying ballast only the floats will have two or three inches of immersion. For river service the greatest immersion of a float should be $\frac{\text{breadth}}{8}$, and for sea service, ordinarily, $\frac{\text{breadth}}{2}$ (Seaton).

129. Design of Parts of a Paddle-wheel.—From equation (3) of § 125 it is seen that the force exerted by the engine in propelling the vessel at a constant speed is

$$R = 2AV(V - v).$$

When the steamer is intended for river service the stress exerted through each wheel is $\frac{R}{2}$; but if she is used at sea or on the lakes the entire force may be transmitted through one wheel as the vessel rolls.

Digitized by Google

The radius rods, or arms, of the wheel are beams loaded at the centre of pressure of the float with a force R or $\frac{R}{2}$, according to the service of the steamer. We will suppose the portion of the wheel out of the water to be rigid, and that the loaded radial arms are attached to it by either inner and outer, or by inner rims only. The beams are then loaded by forces acting in the opposite direction to R, whose values are the transverse strength of the sections of the rims. The radial arms should be as strong as the shaft at the outer bearing. In Chapter XII the method of finding the torsional moment equivalent to the combined twisting and bending moments on the shaft was discussed. Let T be this moment for the paddle-wheel shaft in inch-pounds (this discussion will also apply to a radial paddle), and $\frac{D}{2}$ be half of the effective diameter of the paddle-wheel in inches; then, taking moments about the axis of the shaft,

$$T = \frac{RD}{2},$$

or

$$R = \frac{2T}{D}. \quad \ldots\ldots\ldots \quad (1)$$

From equation (1) of § 91 we have

$$T = \frac{fd^3}{5.1},$$

where $f = 9000$ for wrought-iron shafts, and d = diameter of the shaft in inches. By mechanics, the strength of a beam of rectangular cross-section varies as tb^2, where t = the thickness of the radius arm parallel to the shaft, and b = the breadth of the arm, both in inches. Hence, since there are n of these arms to each wheel,

$$R \propto ntb^2 \propto T \propto d^3. \quad \ldots\ldots\ldots \quad (2)$$

Digitized by Google

As no dimensions are given for the breadth and thickness of each rim and the arm in various parts, it is impossible to give an exact solution. The following approximate solution, given by Seaton,* is sufficiently accurate for designing the paddle-wheel: From (2)

$$tb^3 = \frac{Cd^3}{n} \quad . \quad . \quad . \quad . \quad . \quad . \quad . \quad . \quad . \quad (3)$$

C is 0.7 for a section of the arm near the hub, and 0.45 for a section near the inner rim when there are two rims used. When an inner rim *only* is used the arms project beyond it, and the load comes on these projections. Hence, in this case, the arms must be stronger than when two rims are used. Assuming that the centre of pressure of a float is $\frac{1}{10}D$ from the inner rim,

$$tb^3 = C'd^3 \quad . \quad . \quad . \quad . \quad . \quad . \quad . \quad . \quad . \quad (4)$$

for this case, and $C' = 0.1$.

The following are usual values of the ratio $\frac{b}{t}$:

For the arms—

Near the hub, $\frac{b}{t} = 5$;

Near the rim, $\frac{b}{t} = 3.5$ to 4.

When two rims are used, $\frac{b}{t} = 5$ throughout the length of the arm.

For the rims—

Inner rim, $\frac{b}{t} = 5$, when two rims are used:

Inner rim only, $\frac{b}{t} = 4$, when one rim is used;

Outer rim, $\frac{b}{t} = 4$, two rims being used.

* *A Manual of Marine Engineering*, p. 281.

Digitized by Google

When two rims are used the section of the inner is 0.8 of the arm near it, and the section of the outer rim is equal to that of the arm near it.

When an inner rim only is used its section is equal to that of the arm near the hub.

The stay-rods are bolted to the inner rim between the floats and to the sides of the hub opposite, so that they are diagonals between the arms. The diameter of a stay-rod is equal to twice the thickness of the rim.

All pins used in a feathering-wheel are made of iron cased in brass, and they work in lignum-vitæ bearings. When the wheel is used in sandy water white-metal bearings and iron pins are preferred.

130. **The Screw-propeller** is made in various forms. The best propeller for one ship is not necessarily the best one for a similar ship having the same-powered engines. Ordinarily a four-bladed propeller is best for sea service, and a two-bladed one for smooth water. From equation (3), § 125, we see that the reactive force on the propeller (the thrust on the shaft) is

$$2AV(V-v), \quad . \quad . \quad . \quad . \quad . \quad . \quad . \quad . \quad (1)$$

in which A = area of the disk of the propeller minus the area of a transverse section of the hub in square feet; V = velocity of the screw in feet per second = pitch of the screw in feet multiplied by the number of turns per second; v = the speed of the ship in feet per second; and $s = V - v$ = the slip of the screw.

There is always *real slip* when a vessel is propelled by any instrument. The *apparent slip* is the difference between the speed of the propeller and the speed of the ship. This is not always positive on account of the shape of the "run" of the vessel and the disturbed condition of the water around the propeller.

Formula (1) may be changed * to

$$\text{Thrust in pounds} = 5.66AS(S-s), \quad . \quad . \quad . \quad (2)$$

* See Rankine's *Rules and Tables*, p. 275.

Digitized by Google

where A = area of the stream sent aft by the propeller, in square feet;
S = speed of the screw in knots per hour;
s = speed of the ship in knots per hour.

When the screw is intended for fresh-water service the constant 5.66 becomes 5.50.

The following laws governing a screw-propeller, without frictional or edge resistances, have been deduced by A. Blechynden * from Isherwood's experiments, † viz.:

1. "In any screw the turning moment is independent of the extent of the surface or of the mode in which it is distributed.

2. "Screws of equal diameter tried under similar conditions have turning moments directly proportional to their (pitch ÷ extreme diameter), or pitch ratio, for equal thrusts.

3. "Screws with equal pitch ratios have turning moments proportional to their diameters when indicating equal thrusts.

4. "Screws tried under similar conditions have turning moments proportional to their pitches when indicating equal thrusts.

5. "The effect of surface is the same irrespective of the number of blades into which it is divided so long as it is similarly distributed."

Dr. Froude's experiments with screw-propellers lead him to conclude ‡ that the "equivalent of friction of engines due to the moving load," i.e., the *initial friction*, could be analyzed as follows: Let the

$$\text{Indicated thrust} = \frac{33000\ (\text{I. H. P.})}{\text{Revol. per min.} \times \text{pitch of screw in ft.}}; \quad (3)$$

then, "when decomposed into its constituent parts, indicated

* Paper read before the *North-East Coast Inst. of Engrs. and Shipbuilders*, on "The Screw-propeller," *Engineering*, xliii. pp. 458, 532, 557.

† Report by Chief Engineer B. F. Isherwood, U. S. Navy, to the U. S. Navy Dept., 1874; see *Engineering*, xx., xxi.

‡ *Transactions of Inst. of Naval Architects*, xvii.

Digitized by Google

thrust is resolved into several elements. . . . These elements are:

1. "The useful thrust or ship's true resistance.

2. "The augment of resistance, which is due to the diminution which the action of the propeller creates in the pressure of the water against the stern end of the ship.

3. "The equivalent of the friction of the screw-blades in their edgeway motion through the water.

4. "The equivalent of friction due to the dead weight of the working parts, piston packings, and the like, which constitute the initial or slow-speed friction of the engine.

5. "The equivalent of friction due to the working load.

6. "The equivalent of air-pump and feed-pump duty.

"It is probable that 2, 3, and 4 of the above list are all very nearly proportional to the useful thrust; 6 is probably nearly proportional to the square of the number of revolutions, and thus, at least at the lower speeds, approximately to the useful thrust; 5 probably remains constant at all speeds, and for convenience it may be regarded as constant, though perhaps in strict truth it should be termed 'initial friction.' If, then, we could separate the quasi-constant friction from the indicated thrust throughout, the remainder would be approximately proportional to the ship's true resistance."

Drawing a curve of indicated thrust, in which the ordinates represent the thrust in tons, computed from equation (3), and the abscissæ the speed in knots per hour, "it becomes at once manifest in every case that at its low-speed end the curve refuses to descend to the thrust zero, but tends towards a point representing a considerable amount of thrust, and it is impossible to doubt that this apparent thrust at the zero speed, where there can be no real thrust, is the equivalent of what I [Froude] have termed initial friction; so that if we could determine correctly the point at which the curve, if prolonged to the speed zero, would intersect the axis OY (Fig. 207); and if we were to draw a line through the intersection parallel to the base, the height which would be thus cut off from the thrust ordinates would represent the deduction to be made from them in re-

Digitized by Google

spect of constant or initial friction, and the remainders of the ordinates between this new base and the curve would be approximately proportional to the ship's true resistance."

Dr. Froude also found that the *fluid friction of the blades varied with the* 1.83 *power of the velocity of the screw.* His method of procedure in finding the useful thrust, i.e., the ship's true resistance, is illustrated in Fig. 207.

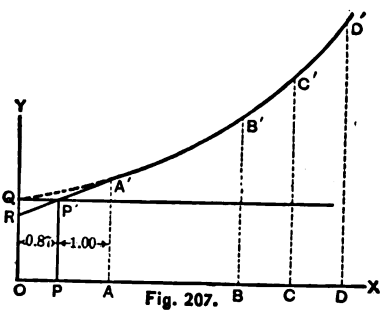

Fig. 207.

Four values of the indicated thrust are computed from equation (3) for different speeds. The indicated horse-power and revolutions of the screw per minute have, of course, been ascertained from trials. The thrust AA' is found for a speed not exceeding five knots per hour, while BB', CC', DD' are found for speeds near the designed velocity of the vessel. Through the points A', B', C', and D' pass a curve. At A' draw a tangent $A'R$. Divide OA into the parts OP and PA, such that

$$\frac{OP}{PA} = \frac{0.87}{1.00},$$

and draw the ordinate through P, cutting the tangent at P'. Through P' draw a line $P'Q$, parallel to OX, which now becomes the new base-line.

Dr. Froude further deduced—

1. That from 0.37 to 0.40 of the power delivered is usefully employed by the screw.

2. That from $\frac{1}{8}$ to $\frac{1}{6}$ of the gross load on the engines is absorbed by the constant friction.

3. That 2.347 multiplied by the horse-power due to the ship's net resistance is equal to the horse-power due to the six elements just considered.

131. The Diameter and Pitch of the Screw.—The greatest value for the diameter will be determined by the draught of water at the stern of the vessel. The screw should always

Digitized by Google

be immersed. Dr. Froude found * that when there is no surface friction or head resistance the larger the diameter is made the better; also, that the pitch should be fine rather than coarse, provided the efficiency of the mechanism remains constant. But, as a matter of fact, the efficiency of the mechanism is not constant at all speeds, and it is greatest at moderate velocities; while the surface friction of a square foot of the blades increases directly as the square of the distance from the centre of the screw.

From equation (2) of § 130 we have

$$\text{Thrust} \propto AS \propto D^2 \times (RP)^2,$$

where D = diameter of the screw in feet;
R = number of revolutions per minute;
P = pitch of the screw in feet.

Again, from equation (3) of § 130 we have

$$\text{Thrust} \propto \frac{\text{I. H. P.}}{RP};$$

therefore

$$\text{I. H. P.} = \text{constant} \times D^2R^2P^2.$$

Whence (Seaton)

$$\text{Diameter of the screw} = 20000\sqrt{\frac{\text{I. H. P.}}{P^2R^2}}; \quad . \quad . \quad (1)$$

$$\text{Pitch of the screw} \quad = \frac{737}{R}\sqrt[3]{\frac{\text{I. H. P.}}{D^2}}. \quad . \quad . \quad . \quad (2)$$

On account of the low speed and shape of cargo steamers the constants 20000 and 737 in these equations should be replaced by 17000 and 660 respectively. (Seaton.)

132. Area of Screw-blades and their Dimensions.—The area should be sufficient to form a complete column of water. If the area is too small the slip is great at high speeds, and the

* *Trans. of Inst. Naval Arch.*, xix.

Digitized by Google

thrust is low; while if it is too great, there is an apparent negative slip, and the efficiency of the screw is decreased. Seaton recommends the following formula:

$$\text{Total area of screw-blades} = K\sqrt{\frac{\text{I. H. P.}}{\text{Revolutions per min.}}}, \quad (1)$$

where $K = 15$ for a four-bladed propeller, 13 for three, and 10 for two blades.

The area of the blades may also be found as follows:

Let θ = pitch angle $= \dfrac{\text{circumference of the screw}}{\text{pitch}}$;

s = slip in percentage of the speed of the centre of pressure of the blades;

x = fraction of pitch, or circumference, required for all the blades to make a complete column of water.

Then

$$x = \frac{1.18(\cot^2\theta + 1 - s)^2}{\cot^2\theta + (1-s)^2} \cdot \frac{\cot\theta}{(1+\cot^2\theta)^2}, \quad (2)$$

and

$$\frac{x}{\text{Number of blades}} = \left\{\begin{array}{l}\text{fraction of pitch or circumference for} \\ \textit{each} \text{ blade.}\end{array}\right.$$

This formula gives $x = 0.471$ when $\theta = 26°$ and $s = 0.10$; and, when $s = 0.25$, we have the following values:

$$\theta = 14, \quad 18\tfrac{1}{2}, \quad 26, \quad 33\tfrac{1}{2},$$
$$x = 0.282, \quad 0.352, \quad 0.467, \quad 0.537.$$

The blades are beams fixed at one end. Whence if t = the thickness of a blade near the hub, and b = its breadth, the strength of the blade is proportional to

$$bt^2.$$

Let d = diameter of the shaft near the screw, in inches;

n = number of blades used.

Then

$$nbt^2 \propto d^3.$$

Digitized by Google

Whence (Seaton)

$$\text{Thickness of blade near the hub} = \sqrt{\frac{Cd^3}{nb}}; \quad . \quad . \quad . \quad (3)$$

$$\text{Thickness of blade near the hub} = \sqrt{\frac{(\text{I. H. P.})C'C}{Rnb}}. \quad (4)$$

Here $C = 4$ for cast-iron blades;*
$= 1.5$ to 2 for composition blades;†
and $C' = 100$ for two-cylinder compound engines;
$= 90$ for three-cylinder compound engines;
$= 120$ for tandem and two-cylinder expansive engines;
$R =$ number of revolutions of shaft per minute.

The thickness of the blade at its tip is about $\frac{1}{3}$ of the thickness at the hub.

The greatest breadth of the blade is given approximately by the formula (Seaton)

$$K\sqrt[3]{\frac{\text{I. H. P.}}{R}}, \quad . \quad . \quad . \quad . \quad . \quad . \quad . \quad (5)$$

where $K = 14$ for a four-bladed propeller;
$= 17$ for a three-bladed propeller;
$= 22$ for a two-bladed propeller.

The breadth of the blade at the tip is from $\frac{1}{3}$ to $\frac{2}{5}$ of the maximum as computed by equation (5).

The diameter of the propeller boss, or hub, is from $\frac{1}{4}$ to $\frac{1}{3}$ the extreme diameter of the screw. Its length is from 0.75 to 0.85 multiplied by its diameter.

---

* Scotch pig-iron, American pig-iron, and scrap-iron, in equal parts, are used for making cast-iron propellers.

† English composition used for naval propellers is made of 87.65 parts by weight of copper, 8.32 parts of tin, and 4.03 parts of Silesian spelter. Its ultimate tensile strength is from 31,000 to 36,000 lbs. per sq. in.

U. S. naval composition for propeller blades consists of 88 parts by weight of copper, 10 parts of zinc, and 2 parts of tin.

Digitized by Google

133. Kinds of Screw-propellers.—*A true screw* is one having a uniform pitch throughout. Its surface is generated by a straight line revolving uniformly about a centre line (the axis of the shaft), along which it also moves uniformly. Other screws expand from hub to periphery (i.e., radially), or from the entering to the leaving edge (i.e., axially).

A true screw is shown in Fig. 208. In making the drawing, as in sweeping up the mould, the guide-board is the directrix

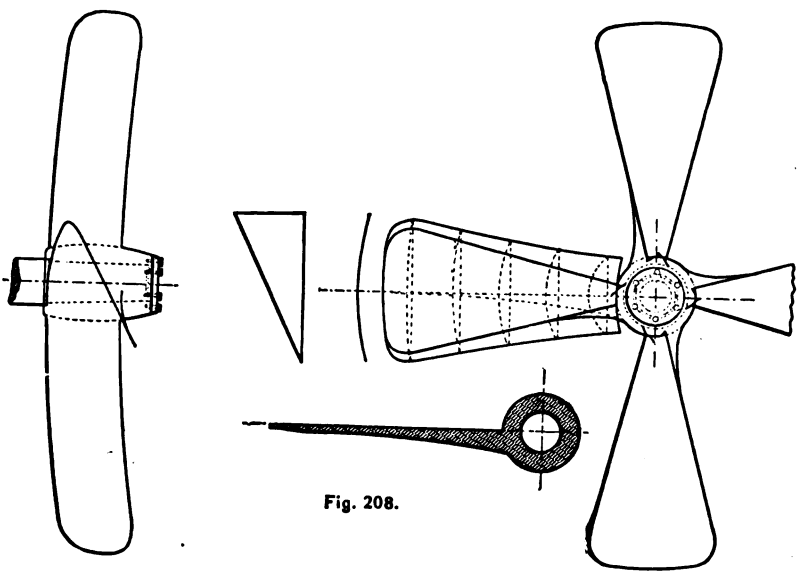

Fig. 208.

and the sweep is the generatrix. A true screw is generally made with the blades flared back or forward, rather than straight, as shown in the figure. In this case the guide-board is still straight, while the sweep is curved downward or upward, as the case may be.

An axially expanding screw has a finer pitch at its leading or entering edge than at its following or posterior edge. The entering edge finds comparatively still water, while the following edge must act in water disturbed by the screw. Such a screw is shown in Fig. 209. The end and side elevations are drawn as for a true screw. It is necessary to know the maxi-

Digitized by Google

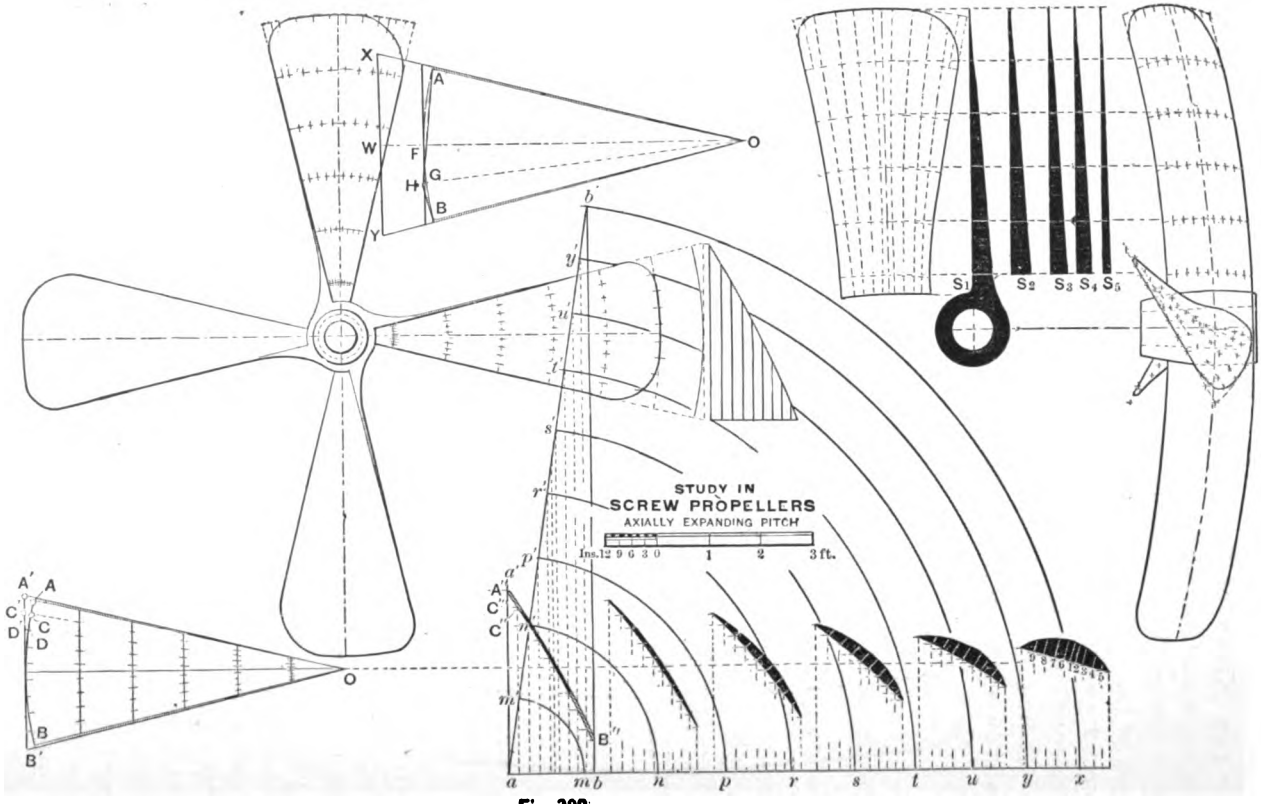

Fig. 208.

Digitized by Google

mum, minimum, and mean pitches. Then the projected length of a blade on a plane parallel to the axis is the given fraction of the mean pitch.

Let OAB represent the end elevation of one blade. The arc AB is developed into the tangent $A'B'$. This is done* by bisecting the arc AB in F and the arc BF in G, as shown at the top of the figure, then drawing from B a tangent to cut the radius OG produced in H; then connecting GA, the length of the arc AB is $BH + HA$, or $A'B'$. Suppose† the pitch to expand from 19 to 24 feet. Lay off on any line parallel to the axis of symmetry of the blade, as ax, the distance ab equal to the given fraction of the mean pitch (mean pitch $= \frac{24+19}{2} = 21.5$ ft.). Then from a lay off to any scale $am = 24$, $mn = 23$, $np = 22$, etc.... $xy = 19$ ft. Erect perpendiculars to ax at a and b. With ax as a radius and a as a centre, describe an arc cutting ob' at b'. Draw ab'. Describe arcs through y, z, etc., cutting ab' at y', u', t', etc. Through these points draw lines parallel to bb'. Divide the rectified arc, $A'B'$, into the same number of parts as ab. Project A' upon aa' at A'', B' upon bb' at B'', and do the same with all intermediate points; now it is evident that as $A'C'$ is a fraction of the circumference, and ab the corresponding fraction of the maximum pitch, $A''C''$ must be the development of an arc of a helix having that pitch, and $C''A''C'''$ is the corresponding pitch angle. The same may be said of $C''D''$, $D''E''$, etc.; hence, if through the points $A''C'' \ldots B''$ we draw a curve it will be the necessary development of the helix projected in AB. By laying down duplicates of the parallel lines aa', bb', etc., and projecting any other developed arcs of the sections of the blade, we will obtain the developments of the other helixes, similar to those shown farther to the right.

Now, to find the thickness of these sections, we construct the scale of thicknesses along the centre line as at S_1. Then at a point 1 at the middle of the first section erect a perpendicular-

* Rankine's *Machinery and Millwork*, p. 28.

† This explanation was prepared by Asa M. Mattice, U. S. Navy.

Digitized by Google

and lay off the curve of the back. Erect perpendiculars at the points 2, 3, 4, etc., and take the lengths of these perpendiculars, included between the face and the back of the section, as bases upon which to construct the scales of thicknesses along the corresponding radial sections, as at S_2, S_3, etc. From these we can construct the thickness strips at any desired points.

The shape of the guide-board is found by laying off on OF produced, the distance OW, from the centre of the screw to the desired position of the board, and erecting the perpendicular XWY. Prolong OA' and OB' to cut this line in X and Y respectively. XY will be the rectified projected length of the guide-board, and its true shape is found as in the case of the thickness strips.

Screws expanding axially with straight sides are made with a curved guide-board and a straight sweep. If the sides of the blades are flared, use a curved sweep and curved guide-board.

A radially expanding pitch is sometimes used to overcome the objection that very little propelling effect is realized from that portion of the blade near the hub. A fine pitch here obviates friction, while towards the circumference the pitch is increased because the propelling effect is greater, while the friction remains about the same. This screw, if it has straight sides, is formed with a straight sweep guiding two straight guide-boards, one placed at the hub and the other at the circumference. When the sides are flared, a curved sweep is used.

A combined radial and axial expanding pitch is made, if the sides are straight, by using two curved guide-boards and a straight sweep. When the sides are flared the straight sweep is replaced by one that is curved.

A screw with a compound pitch (two different pitches) is made with three guide-boards, which are curved or straight, according to whether the screw expands axially or not; and two sweeps, either curved or straight, according to whether the sides of the blades are flared or straight.

Screws with a compound pitch and having contorted shapes, such as the pear-shaped Griffith, the cimeter-shaped Hirsch, or Nystrom, Fig. 210, or the Loper, may be produced as follows:

Digitized by Google

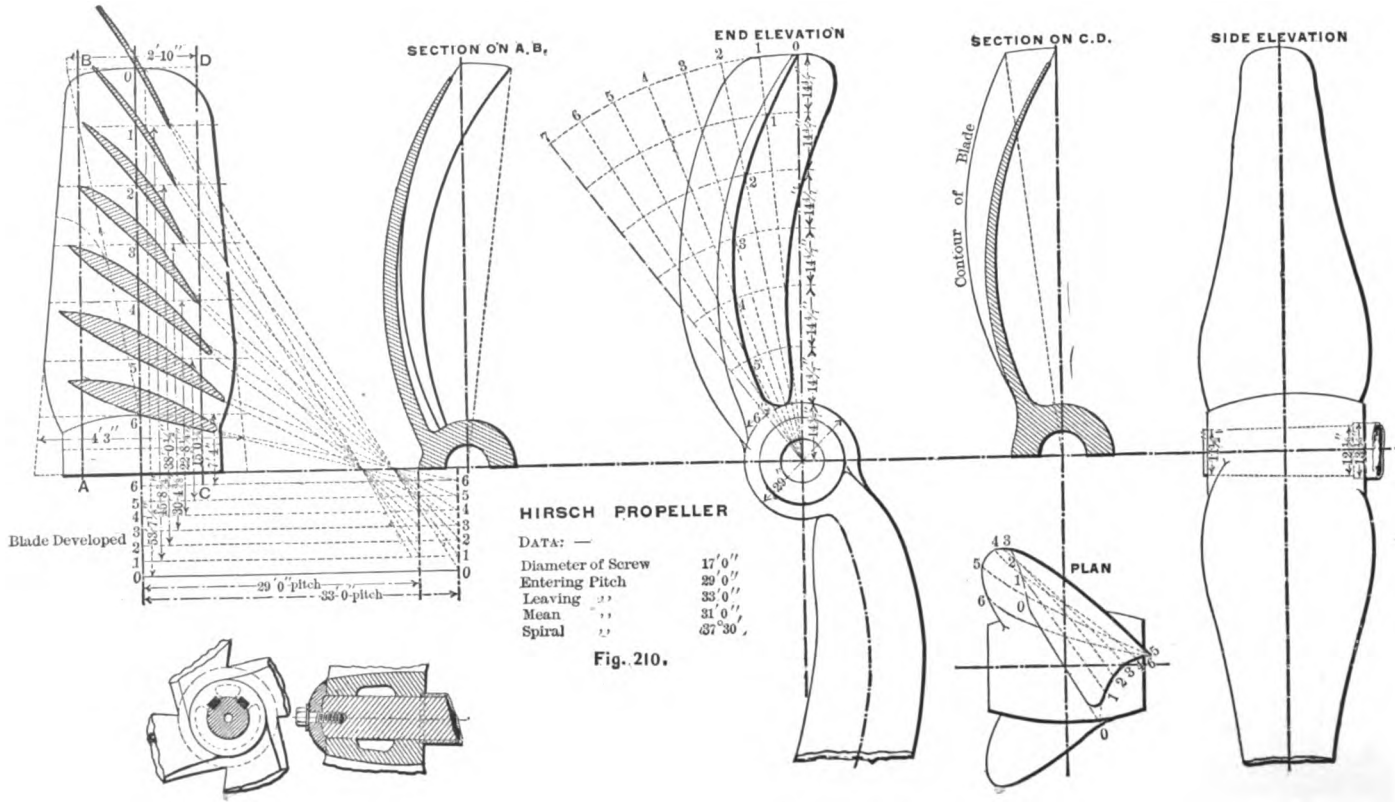

HIRSCH PROPELLER

DATA: —

Diameter of Screw	17′0″
Entering Pitch	29′0″
Leaving ,,	33′0″
Mean ,,	31′0″,
Spiral	37°30′,

Fig. 210.

Digitized by Google

If the pitch is complex, use as many guide-boards as are necessary to produce the shape, and curve them for axially expanding pitch. If more than two guide-boards are used, there must be two or more jointed sweeps, or they may be separate, as desired. The sweep is perpendicular to the spindle if the blade is straight, and bent down at the required angle if the sides are flared.

Digitized by Google

APPENDIX.

134. Strength of Materials.—The following table is given on the authority of Rankine, Kirkaldy, Fairbairn, Wade, Barlow, Telford, Anderson (Com. B. A.), Shock, Lloyd, Hodgkinson, Trautwine, and others. The values refer to the ultimate resistance of the material in pounds per square inch of cross-section.

Metal.	Tension.	Compression.	Shearing.	Transverse or breaking across.	Modulus of elasticity.
Iron, cast, average	16,500	86,000	19,000 to 28,000	17,000	18,270,000
" " with scrap	28,000				
" " pig	13,000				
" " first melting	20,800				
" " 2d "	24,700	99,680			
" " 3d "	26,800	140,000			
" " hot blast		111,300			
" " cold "		99,200			
Iron, wrought, bars, English.	50,000 to 66,000	33,000 to 36,000	40,000 to 46,000	40,000	28,000,000
" " " American	45,000 to 70,000	"	"	"	"
" " large forgings	35,000				
" " hammered bars		33,000 to 36,000			
" " plates	45,000 to 65,000				
" " " beams				40,000 to 42,000	
Steel, plate, American	50,000 to 95,000				
" " Bessemer	95,000 to 112,000				
" rolled and hammered ingots	125,000				
" bar	95,000 to 120,000		82,800		36,000,000 to 42,000,000
" " tempered	214,400	50,000 to 60,000			
" chrome	180,000				
" cast		225,000			
Steel, hematite bar		159,578			
" American black diamond		102,500			
Copper, wrought	33,600	103,000			
" sheet	30,000				
" cast	20,000	117,000			
Gun metal, bronze	33,000 to 36,000				10,000,000
Bronze, 8 Cu, 1 Sn					9,900,000
Brass, cast	18,000	16,480			9,170,000
Aluminum bronze, 90 Cu, 1 Al	73,181				
Phosphor "	34,465				

Digitized by Google

FORMULÆ ON BEAMS.

Stress is a load applied to a body and tending to produce distortion. Stress may produce extension (tensile), compression (thrust), wrenching (torsion), breaking across (transverse), or cutting off (shearing). Thus a piston-rod is subjected to tension at one stroke, and to compression at the succeeding stroke of the piston. Again, the propeller shaft of a steamer is subjected to transverse stress by the load due to the weight of the screw, to thrust or compression due to the forward reaction of the water upon the screw, and to torsion by the power transmitted through it in driving the vessel.

The internal distortion produced in a body through the application of an external force is called *strain*. Hence stress is the cause, and strain is the effect. If, within the proof limit of elasticity, a body stretch a distance a through the application of a stress b, it will elongate a distance $2a$ when a load $2b$ is applied. This is called "Hooke's law," and has been found to be correct within the proof limit of any material.

When a body is subjected to a small load, only a small strain is produced. When the small load is removed, the body resumes its original proportions and shape. As the load is increased this will not hold true indefinitely, for it will be seen that when it exceeds what is known as the "proof stress," a permanent distortion or "set" has taken place. As the loads are increased beyond the proof stress, Hooke's law is inapplicable. The "ultimate" stress is that load which produces rupture.

The intensity of stress is the load upon a unit area of the body. This unit stress produces a strain in a unit length of the body. Hence strain is the distortion in a unit length of the body. The strain in the entire length of the body is called elongation. Hence elongation is the product of the length and the strain. Elongation is positive for a tensile and negative for a compressive loading of the body.

If we imagine Hooke's law to hold true indefinitely, that stress which produces unit strain is called the *modulus of elasticity*. Thus, if the body has a tensile load sufficient to pull

Digitized by Google

the body to double its unstrained length, such a load is called the modulus of elasticity when measured on the square inch of section of the body.

A further discussion of this subject may be found in any of the many excellent works on Strength of Materials. The following are

Formulæ for Beams.

Let A = area of section in square inches;
l = length of span in inches;
W = total load uniformly distributed, in pounds;
d = depth of beam in inches;
n = distance from neutral axis to top or bottom fibre, in inches;
f = unit stress on extreme fibre, in pounds per sq. in.;
D = greatest deflection in inches;
I = moment of inertia of section;
$r = \sqrt{\frac{I}{A}}$ = radius of gyration of section;
E = modulus of elasticity of material in pounds per square inch;
M = greatest bending moment in inch-pounds.

Then, from mechanics,

For a beam fixed at one end and loaded uniformly,

$$M = \frac{Wl}{2} \qquad = \frac{fI}{n} \quad \text{and} \quad D = \frac{Wl^3}{8EI}.$$

For a beam fixed at one end and loaded with W at free end,

$$M = Wl \qquad = \frac{fI}{n} \quad \text{and} \quad D = \frac{Wl^3}{3EI}.$$

For a beam supported at the ends and loaded uniformly,

$$M = \frac{Wl}{8} \qquad = \frac{fI}{n} \quad \text{and} \quad D = \frac{Wl^3}{76.8EI}.$$

Digitized by Google

For a beam supported at the ends and loaded with W at a point a inches from one end,

$$M = \frac{Wa(l-a)}{l} = \frac{fI}{n} \quad \text{and} \quad D = \frac{a^2(l-a)^2W}{3EIl}.$$

Moment of Inertia, I.

Rectangle, b = breadth in inches, and d = depth in inches,	$I = \frac{bd^3}{12}$, $\quad r^2 = \frac{d^2}{12}$.
Hollow rectangle,	$I = \frac{bd^3 - b_1d_1^3}{12}$, $\quad r^2 = \frac{bd^3 - b_1d_1^3}{12(bd - b_1d_1)}$.
Square, $b = d$,	$I = \frac{d^4}{12}$, $\quad r^2 = \frac{d^2}{12}$.
Hollow square,	$I = \frac{d^4 - d_1^4}{12}$, $\quad r^2 = \frac{d^2 + d_1^2}{12}$.
Circle about diameter,	$I = \frac{\pi d^4}{64}$, $\quad r^2 = \frac{d^2}{16}$.
Hollow circle,	$I = \frac{\pi(d^4 - d_1^4)}{64}$, $\quad r^2 = \frac{d^2 + d_1^2}{16}$.
Phœnix column, a = area, d = least diameter,	$I = \frac{ad^2}{7.6}$, $\quad r^2 = \frac{d^2}{7.6}$.
Angle iron, legs each l, area = a,	$I = \frac{al^2}{25}$, $\quad r^2 = \frac{l^2}{25}$.
Angle iron, legs l and l_1, area = a,	$I = \frac{al^2l_1^2}{13(l^2 + l_1^2)}$, $\quad r = \frac{l^2l_1^2}{13(l^2 + l_1^2)}$.
Cross,	$I = \frac{(\text{Greatest width})^2 \times \text{area}}{22.5}$.
T-iron, equal legs,	$I = \frac{(\text{Width of flange})^2 \times \text{area}}{22.5}$.
I-section,	$I = \frac{(\text{Width of flange})^2 \times \text{area}}{21}$.
Ellipse, diameters D and d (about D),	$I = \frac{\pi}{64}Dd^3$, $\quad r^2 = \frac{d^2}{16}$.

Digitized by Google

135. Saturated Steam Table.—The following table is taken from Northcott's treatise on *The Steam-Engine:*

Absolute pressure in pounds per square inch.	Temperature of boiling-point in degrees Fahr.	Cubic feet of steam weighing one pound.	Latent heat of vaporization per pound of steam generated under a constant pressure.	Total heat units required to generate one pound of steam from water at 32° F. under a constant pressure.
0.0	−461.2	.....	.....	.....
0.085	32	3390.0	1091.70	1091.70
1.00	102	332.6	1043.02	1113.05
1.25	109.6	269.3	1037.98	1115.62
1.50	115.8	226.8	1033.41	1117.26
1.75	121.3	196.1	1029.58	1118.94
2.00	126.4	173.0	1026.02	1120.49
2.50	134.8	140.1	1020.17	1123.06
3	141.6	118.0	1015.43	1125.14
3.5	147.8	102.16	1011.09	1127.02
4	151.1	90.12	1007.38	1128.63
4.5	157.8	80.67	1004.10	1130.07
5	162.3	73.50	1000.95	1131.44
5.5	166.4	66.77	998.08	1132.69
6	170.1	61.50	995.49	1133.82
6.5	173.5	57.03	993.11	1134.86
7	176.9	53.16	990.73	1135.90
7.5	180.0	49.79	988.55	1136.84
8	183.0	46.83	986.44	1137.75
9	188.4	41.87	982.66	1139.40
10	193.3	37.87	979.22	1140.89
11	197.8	34.60	976.06	1142.26
12	202.0	31.85	973.12	1143.55
13	205.9	29.51	970.36	1144.72
14	209.6	27.50	967.78	1145.87
14.7	212.0	26.36	966.08	1146.60
15	213.1	25.86	965.31	1146.93
16	216.3	24.32	963.06	1147.91
17	219.5	22.97	960.81	1148.89
18	222.5	21.76	958.68	1149.80
19	225.3	20.68	956.76	1150.62
20	228.0	19.70	954.79	1151.47
21	230.7	18.82	952.89	1152.30
22	233.3	18.01	951.05	1153.09
23	235.8	17.27	949.28	1153.85
24	238.2	16.60	947.58	1154.58
25	240.5	15.97	945.96	1155.29
26	242.7	15.39	944.40	1155.96
27	244.8	14.86	942.91	1156.60
28	246.8	14.36	941.50	1157.21
29	248.7	13.89	940.15	1157.79
30	250.5	13.46	938.87	1158.34
32	254.0	12.67	936.39	1159.41
34	257.4	11.97	933.98	1160.45
36	260.7	11.35	931.61	1161.46
38	263.9	10.79	929.36	1162.43
40	267.0	10.28	927.16	1163.38

Digitized by Google

Absolute pressure in pounds per square inch.	Temperature of boiling-point in degrees Fahr.	Cubic feet of steam weighing one pound.	Latent heat of vaporization per pound of steam generated under a constant pressure.	Total heat units required to generate one pound of steam from water at 32° F. under a constant pressure.
42	270.0	9.8298	925.02	1164.29
44	272.9	9.4123	922.96	1165.18
46	275.7	9.0298	920.96	1166.03
48	278.4	8.6785	919.03	1166.85
50	281.0	8.3545	917.17	1167.64
52	283.5	8.0547	915.39	1168.41
54	285.9	7.7764	913.67	1169.14
56	288.2	7.5176	912.02	1169.84
58	290.4	7.2758	910.44	1170.51
60	292.6	7.0497	908.86	1171.18
62	294.7	6.8378	907.35	1171.82
64	296.8	6.6386	905.84	1172.46
66	298.8	6.4511	904.40	1173.07
68	300.8	6.2743	902.96	1173.68
70	302.8	6.1071	901.53	1174.29
72	304.7	5.9480	900.17	1174.87
74	306.6	5.7990	898.82	1175.46
76	308.5	5.6568	897.45	1176.03
78	310.3	5.5214	896.16	1176.58
80	312.1	5.3926	894.87	1177.13
82	313.8	5.2698	893.65	1177.65
84	315.5	5.1526	892.43	1178.17
86	317.1	5.0406	891.27	1178.65
88	318.7	4.9336	890.13	1179.15
90	320.3	4.8311	888.97	1179.63
92	321.8	4.7329	887.89	1180.09
94	323.3	4.6387	886.80	1180.54
96	324.8	4.5482	885.72	1181.00
98	326.3	4.4613	884.64	1181.46
100	327.7	4.3777	833.62	1181.88
105	331.2	4.1818	881.10	1182.95
110	334.6	4.0025	878.65	1183.99
115	337.9	3.8390	876.27	1185.00
120	341.1	3.6883	873.99	1186.00
125	344.2	3.5491	871.72	1186.92
130	347.2	3.4203	869.56	1187.85
135	350.1	3.3008	867.44	1188.72
140	352.9	3.1896	865.41	1189.57
145	355.6	3.0859	863.46	1190.40
150	358.3	2.9888	861.50	1191.22
160	363.4	2.8126	857.80	1192.77
170	368.3	2.6570	854.25	1194.27
180	373.0	2.5184	850.83	1195.70
190	377.5	2.3943	847.55	1197.07
200	381.8	2.2824	844.42	1198.39
210	385.8	2.1810	841.48	1199.60
220	389.7	2.0881	838.63	1200.80
230	393.6	2.0031	835.77	1201.99
240	397.3	1.9251	833.04	1203.11
250	400.8	1.8533	830.46	1204.18
275	409.1	1.6982	824.35	1206.72
300	417.1	1.5653	816.44	1209.16

Digitized by Google

136. Supplement to § 65.—The author has received corrections to this article from Prof. W. F. Durand and Asst.-Engineer W. H. Creighton, U. S. Navy, the latter giving the following:

"$P_1 = \frac{P}{\cos \phi'}$, and, therefore, if instead of drawing $e'e''$ to intersect OG, you let it intersect the vertical line in r, you simplify the execution of the problem, as you do not have to draw any perpendiculars OG. You also get a more correct solution, as the angle between GO and the vertical through O is equal to ϕ.

"To prove this, take moments about K and O, which give,—

$$\text{About } K, \quad . \quad . \quad . \quad P \times KL = P_1 \times KL';$$
$$\text{About } O, \quad . \quad . \quad . \quad P_1 \times OG = P' \times OE.$$

Eliminating P_1, we find $P' = P \times \frac{OH}{OE}$."

Prof. Durand's correction is as follows:

"Let OE be the position of the crank-arm, and LE that of the connecting-rod. Let Oe' represent the net piston-pressure. Then Oe'' represents the tangential effort, according to § 65. The other value, according to my view, is Or. The difference is not great, but it is perceptible, and is, of course, a question between right and wrong. The way in which the error seems to arise in § 65 is in assuming the effective velocity of L to be proportional to the perpendicular from K on LE.

"Since K is the instantaneous centre, the relative velocities of L and E are in the ratio $\frac{KL}{KE}$. But

$$\frac{KL}{KE} = \frac{\sin LEK}{\sin KLE} = \frac{\sin (\theta + \phi)}{\cos \phi}.$$

Therefore, if P is the effective acting pressure at L, we have for the tangential effort P'

$$P' = P\frac{\sin (\phi + \theta)}{\cos \phi} = P \sec \phi \sin (\theta + \phi)$$

Digitized by Google

If Oe' is made equal to P, it is easily seen that

$$Oe' \sec \phi \sin (\theta + \phi) = Or.$$

"If the special value of $\theta = 90°$ be taken, when the connecting-rod is infinite in length, or when $\phi = 0°$, then it seems plain that P' must equal P. This would follow by the construction above, but not by that given in § 65."

Digitized by Google

INDEX.

(The numbers refer to pages.)

AIR-PUMP, design of, 305.
parts of, 302.
various kinds of, 295, 301.
Alloys for bearings, 23, 229.
for engines, table, 229.
for pistons, 23.
for screw propellers, 374.
strength of, 374. 381.
Area of valve-ports, 31, 98.

BARS, eye, proportions of, 118 *et seq.*
Beams, formula for, 383.
Beam, walking. 350.
Bearing, brasses for, 224, 329.
—crank-shaft, 241, 259.
design of, 329.
distance between, 331.
friction of, 4,189.
line-shaft, 259.
length of, 262.
materials for, 23, 229.
(*see* Pillow-blocks).
stern, 255.
thrust, 263.
various forms of, 261.
Bolts, 346.
for connecting-rods, 221.
for couplings, 266.
for foundations, 326.
for valve-chests, 97.
for valve-gears, 114.
Brake, block, 272.
friction, 268, 271.

CLEARANCE, definition, 2.
how measured, 2, 8, 67.
of valve-ports, 31.
piston, 1, 2.
Circulating pump (*see* Pump).
Centrifugal pumps (*see* Pump).
Cocks, plug, 340.
Compound engine, cylinder ratio, 151, 155, 157, 160.
cylinder diameters by graphics, 152, 153.
cylinder diameters by methods compared, 155.
cylinder diameters by no "drop" method, 143.
cylinder diameters by Rae's method, 140.
cylinder diameters by Rankine's method, 145.
cylinder diameters by Seaton's method, 146.
indicator cards of, 161 *et seq.*
kinds of, 128, 160.
theory of, 131 *et seq.*
triple-expansion, 155, 157, 160.
triple-expansion, kinds of, 160.
Condensers, jet, Davidson's, 302.
jet, steam inlet, 294.
jet, water outlet, 294.
jet, water used, 285, 294.
jet, Worthington's, 295, 298.
jet, thickness of shell, 294.
jet, various forms of, 294, 295, 298, 302.
jet, volume of, 294.
jet, volume of steam, 284.
surface, advantages, 277.
surface, deduction of formula, 280, 283.
surface, experiments on, 278, 279, 283.
surface, rules for surface, 276, 277, 283.
surface, steam used, 284.
surface, theory of a, 276, 280.
surface, thickness of shell, 288.
surface, tube area, 291.

Digitized by Google

Condensers, surface, tube length and thickness, 294.
surface, tube materials used, 294.
surface, tube packings, 290.
surface, various kinds, 285, 288, 291, 298.
surface, water for condensing, 285.
Connecting-rod diameter, 217, 219.
ends, 219, 224.
forms of, 225.
Couplings for pipes, 348.
for shafts, 266, 270.
for shafts, bolts used, 270.
Crank-arm, design, 239.
eyes, 239.
keys, 125, 244.
shapes, 241.
Crank-effort, affected by friction, 191, 194.
affected by weight of parts, 173 *et seq.*
diagrams, 169 *et seq.*
meaning of, 168.
relation to fly-wheel, 199.
Crank-pin, 228.
boxes, 228.
diameter, 233, 234, 237.
dead-point, 33.
friction, 228.
length, 231.
locomotive, 232.
pressures, 232.
proportions, 232.
Crank-snaft design, 244, 248, 252, 253.
forms of, 241.
loads on, table, 246.
Cross-head, design, 213.
friction of, 4, 187.
forms of, 213 *et seq.*
Cylinder bore, 11.
clearance, 1, 2, 8, 11, 31, 67.
(*see* Compound engines).
design, 25.
diameter, 6, 7, 10.
head, 25, 29.
jacket and joints, 28.
length, 6, 11.
materials for, 25.
of pumps (*see* Pumps).
radiating surface, 6.
relief valve, 317.
reversing, 333.
thickness of, 26.
triple-expansion engine (*see* Compound engine).

ECCENTRIC, angular advance of, 33.
(*see* Valve-gears).
Eccentric rods (*see* Valve-gears).
strap (*see* Valve-gears).
throw, 32, 35.
Economy of fuel, 5.
Engine, centres, 33.
compound (*see* Compound Engine).
dead points, 33.
for reversing valves, 333.
foundations, 324.
frames, 327.
friction (*see* Friction).
holding-down bolts, 326.
horse-power of (*see* Horse-power).
moving parts of, 5, 169, 199.
triple-expansion (*see* Compound Engine).
types of, 1, 128, 160.
work done by, 4, 191, 353, 357, 370.
Expansion joints, 28, 343.
of metals, 343.
Eye-bars, proportions of, 118 *et seq.*

FLAT PLATES, thickness of, 95.
Flow of water through pipes, 317.
Fly-wheel, design of, 199.
kinds of, 203.
Foundations of engines, 324.
Frames of engines, 327.
Friction of bearings, 4, 189, 229.
of brakes, 268, 271, 272.
of cross-head, 187.
of crank-pin, 189, 228.
of effects on turning power, 191, 194.
of engine, 4, 191.
of guide, 4, 5, 187.
of journals, 4, 189, 229.
of piston, 186.
of pipes, 319.
of pumps, 321.
of propellers, 371.
of ship's wetted surface, 355, 357.
of stuffing-box, 186.
of valve, 111.
of wrist-pin, 188.
Fuel, economy of, 5.

GUIDE, design of, 209.
distance between two, 211.
friction of, 4, 5, 187.
materials used for, 213.
various forms of, 213.

HEAT, experiments on conductivity, 6, 278, 279.
in saturated steam, 384.
non-conductors of, 6.
radiation from cylinders, 6.

Digitized by Google

Holding-down bolts, 326.
Horse-power formula, 2, 7.
of shafting, 275.
to drive a ship, Kirk, 355, 357.
to drive a ship, Rankine, 357.
Hot-well, 295, 317.
Hydraulic formulæ, 317 *et seq.*
Hyperbolic logarithms, 8.

INJECTION orifice and valves, 298.
orifice strainer, 301.
water, 285.

JET CONDENSERS (*see* Condensers).
Joints, expansion, for cylinders, 28.
expansion for pipes, 343.
Journal, crank-shaft, 231, 233 to 237.
distance between two, 331.
friction of, 4, 188, 189, 228.
(*see* Bearing).
(*see* Pillow-block).

KEYS for shafting, 124 *et seq.*
Kirk's analysis of powering ships, 355.

LAGGING, kinds of, 6.
Lap of a valve, 33.
Lead of a valve, 34.
Link-motions (*see* Valve-gears).
Link-block (*see* Valve-gears).
Logarithms, hyperbolic, 8.

MATERIALS used in construction, 23, 25, 97, 209, 228, 374, 381.

NON-CONDUCTORS of heat, 6.

OIL-CUP, centrifugal, 241.
Orifice for injection water, 298.
strainer for, 301.

PADDLE-WHEEL (*see* Propellers).
Pillow-blocks, bolts, 331.
brasses, 329.
caps, 330.
distance between, 331.
design of, 329.
various forms of, 259, 329.
Pipes, brass, thickness of, 336.
cast-iron, thickness of, 336, 337.
copper, thickness of, 336.
couplings, 348.
distance between hangers, 337.
drop of pressure in, 7.
expansion joints of, 28, 343.
flanges and bolts, 336.
hangers of, 337.
threads of, Briggs's system, 348.
Pipes, wrought-iron, thickness of, 335.
Piston clearance, 1, 2.
design of parts of, 11, 22 *et seq.*
friction of, 186.
materials used for, 23.
parts of, 13 *et seq.*
rod diameter, 204, 205, 207.
rod ends, 207.
slide valve, 99.
speed, 2, 3, 160.
valve, 99.
various kinds, 12 *et seq.*
Plates, flat, thickness of, 95.
Plug-cock, design of, 340.
Propeller, theory of, 353, 365.
feathering paddle, theory of, 360.
feathering paddle, arms, 361, 367.
feathering paddle, diameter, 363.
feathering paddle, floats, 363.
feathering paddle, rims, 369.
radial paddle, 359, 368.
screw, area of blades, 372.
screw, diameter, 371.
screw, friction, 371.
screw, materials used for, 374.
screw, pitch, 371.
screw, slip of, 368.
screw, theory of, 369.
screw, thickness of blades, 374.
screw, thrust on, 368, 369, 371.
screw, various kinds of, 375.
Pumps, air (*see* Air-pump).
centrifugal, design, 313.
centrifugal, kinds, 311.
circulating, design, 308.
circulating, parts, 309.
to deliver against a head, 321.
feed, 314.
feed, relief valve, 315.
hydraulic formula for, 317.
power of, 333.
steam-cylinder of, 334.

RADIAL PADDLE-WHEEL, 359.
Radiation of heat, 5.
Reversing gears, steam, 333.
Revolutions of shafting, 3.

SCREW propellers (*see* Propellers).
threads for bolts, 344.
threads for pipes, 348.
Shafts, Board of Trade's rules, 272.
bearings for (*see* Bearings).
couplings, 266, 269.
crank- (*see* Crank-shaft).
distance between bearings, 331.
keys for, 124.
line, 254.

Digitized by Google

Shafts, propeller, 254, 257, 258.
propeller, form of, 255.
revolutions of, 3.
rules for, 273.
thrust, 254.
Ship resistances, 355.
Slides, design of, 208.
Steam, compression of, 9, 67.
chest (*see* Valve-chest).
expansion of, 8, 146, 155, 160.
heat in, 384.
pressure in a cylinder, 7.
ports, 33.
table of saturated, 385.
Stern-bearing, 255.
Stop-valves (*see* Valves).
Strainers, 301, 317.
Strength of materials, 381.
Stuffing-box design, 104, 106.
kinds, 104 *et seq.*
Surface condensers (*see* Condensers).

TABLE of alloys, 229.
of beams, 382.
of bolt threads, 346.
of cast-iron pipe, 337
of crank-effort, 246.
of crank-pin pressures, 230.
of crank-pin ratios, 232.
of cylinder ratios, 151, 157, 160.
of cylinder thickness, 27.
of distance between bearings, 332.
of expansion joints, 122.
of eye-bars, 119.
of hyperbolic logarithms, 8.
of journals, 230.
of loads on foundations, 326.
of loads on crank-shafts, 246.
of piston clearance, 2.
of piston flanges, 11.
of piston speeds, 3, 160.
of piston weights, 24.
of pipe-threads, 348.
of plug-cocks, 342.
of non-conductors of heat, 6.
of saturated steam, 385.
of screw-threads, 346, 348.
of steam used per I. H. P., 284.
of strength of materials, 381.
of stuffing-boxes, 105.
of wrought-iron pipes, 335, 348.
Thrust bearing, 263.
collars, 264.
indicated, 258, 369.
maximum, 246, 258.
mean, 246, 258.
on propellers, 368.
shafts, 254.

Triple-expansion engine (*see* Compound).
Types of engines, 1, 128, 160.

VALVE, adjustments, 65.
Allen, 46.
balanced, 47, 103.
chest bolts, 29, 97.
chest cover, 97.
chest size, 97.
chest materials, 97.
chest of piston-valve, 99.
chest walls, 95.
cylinder for reversing, 333.
cylinder relief, 317.
dimensions of, 98.
friction of, 111, 333.
gears, Allen's, 79.
gears, bolts, 115.
gears, eccentric, 32, 72, 122.
gears, eccentric, angularity, 72.
gears, eccentric, rods, 116, 118.
gears, eccentric, straps, 116, 121.
gears, eccentric, throw, 32, 35, 124.
gears, example of, 118.
gears, Fink's, 79.
gears, Gooch's, 76.
gears, Joy's, 81.
gears, link of, 71, 74, 114, 116, 118.
gears, Marshall's, 87.
gears, steam reversing, 333.
gears, Stephenson's, 71, 117.
Gozenbach's 54, 65.
kinds, 32.
Meyer's, 58, 100, 114.
piston, 99.
plug-cocks, 340.
port, 31, 35, 99.
pump relief, 315.
slide, adjustment, 65.
slide, Allen, 46.
slide, diagrams, 35 *et seq.*
slide, double-ported, 45.
slide, examples on, 39 *et seq.*
slide, expansion, 33, 37.
slide, face of, 32.
slide, friction, 111, 333.
slide, gridiron, 49.
slide, Gozenbach, 49.
slide, kinds, 32.
slide, lap, 33, 35.
slide, lead, 33, 35.
slide, Meyer, 58, 100, 103
slide, piston, 99.
slide, seat of, 32, 98, 99
slide, stem, 98, 110, 114.
slide, square, 31, 35.
slide, Zeuner's diagrams, 35 *et seq.*

Digitized by Google

Valve stem, 98. 111, 114.
stem, cross-head, 114.
stem diameter, 110.
stem fastenings, 99, 103, 114.
stem, forms of, 99, 103, 114.
stem for Meyer's valve, 103, 114.
stem stuffing-box, 104.
stop, 338.
travel, 33, 35.
Velocity of piston, 2, 3.
of steam, 3, 31.
Velocity of water in pipes, 323.
WALKING-BEAM, 350.
Water, for condensers, 285.
flow of, through pipes, 317.
Weight of engines, 5.
of moving parts of engine, 5, 173 *et seq.*
Wrist-pin, 213.
friction, 188.
ZEUNER's valve diagrams, 37 *et seq.*

Digitized by Google

Digitized by Google

STEAM-ENGINE DESIGN.

FOR THE USE OF

MECHANICAL ENGINEERS, STUDENTS, AND DRAUGHTSMEN.

BY

JAY M. WHITHAM,

MEMBER OF AMERICAN SOCIETY OF MECHANICAL ENGINEERS;
PROFESSOR OF ENGINEERING, ARKANSAS INDUSTRIAL UNIVERSITY;
LATE ASSISTANT-ENGINEER, U. S. NAVY.

STEAM-ENGINE DESIGN treats of the Mechanics of the Steam-engine. It is the application of mechanics to the proportioning of the parts of any form of an engine, for any duty. Constructive details are shown by *over two hundred handsome illustrations.*

The treatise is divided into subjects, as shown by the following Table of Contents. The Index is exhaustive.

The chapters on Compound and Triple-expansion Engines, Crank-effort, Friction, Condensers and Pumps, Propellers, and the Powering of Vessels are specially valuable. Formulæ and rules are in most cases deduced, yet they are so arranged that they can be found and applied at once. All of the more difficult formulæ are applied to illustrative examples.

Digitized by Google

Digitized by Google

Digitized by Google

Digitized by Google

Digitized by Google

Digitized by Google

LIBRARY
GRADUATE SCHOOL OF ENGINEERING
HARVARD UNIVERSITY

Please sign your name and address on this card, and deposit in box provided.

This book may be kept

ONE WEEK

Digitized by Google

HARVARD ENGINEERING SCHOOL

Digitized by Google